Parts Manual

Mfg. No: 12V332-0004-F1

Copyright © Briggs & Stratton. All Rights reserved

Model Components

	Page
Air Cleaner Group	4
Blower Housing Group	6
Carburetor Group	8
Controls Group	10
Crankcase Cover/Sump and Lubrication Group	12
Crankshaft Group	14
Cylinder Group	16
Cylinder Head Group	18
Exhaust Group	22
Flywheel, Ignition, and Starter Group	24
Fuel Supply Group	26

Not For Reproduction

Copyright © Briggs & Stratton. All Rights reserved

Air Cleaner Group

Mfg. No: 12V332-0004-F1

536

968

467

467A

445

1453

875

1406

259

265

267

163

11

185

Not For Reproduction

Copyright © Briggs & Stratton. All Rights reserved

Air Cleaner Group

REF NO	PART NO	QTY	DESCRIPTION
11	597013	1	TUBE, Breather
163	596768	1	GASKET, Air Cleaner
185	590692	1	NUT -(Air Cleaner Base)
259	691189	1	BRACKET, Casing Clamp
265	691024	1	CLAMP, Casing
267	597027	1	SCREW -(Casing Clamp)
445	596760	1	FILTER, A/C Cartridge
467	596759	1	KNOB, Air Cleaner Cover
467A	596758	1	KNOB, Air Cleaner Cover
536	597060	1	CLEANER, Air
875	597061	1	BASE, Air Cleaner
968	597062	1	COVER, Air Cleaner
1406	597065	1	VALVE, Debris
1453	596756	1	SEAL, Air Cleaner Cover

Not For Reproduction

Copyright © Briggs & Stratton. All Rights reserved

Blower Housing Group

Mfg. No: 12V332-0004-F1

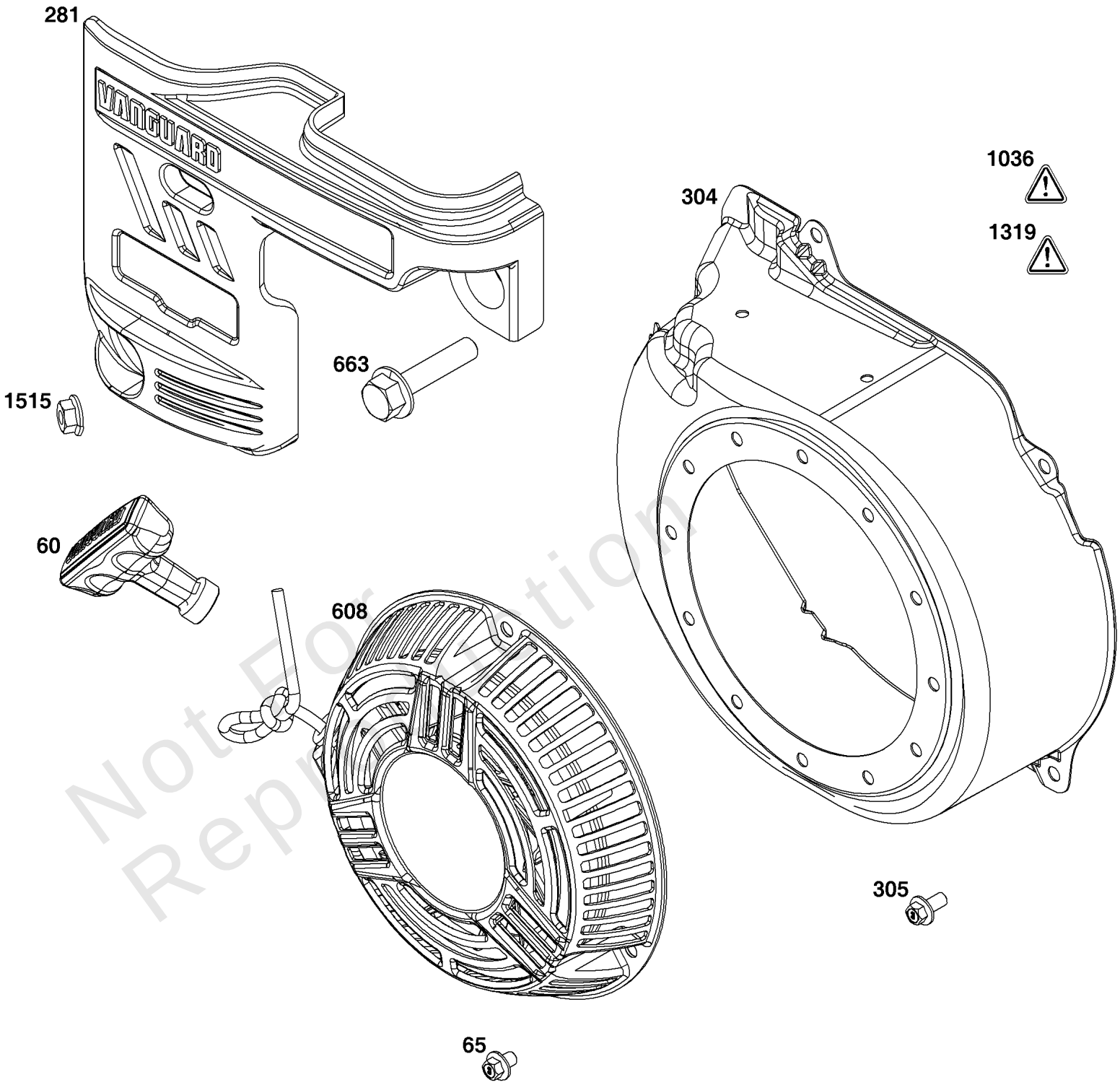

Not For Reproduction

Copyright © Briggs & Stratton. All Rights reserved

Blower Housing Group

REF NO	PART NO	QTY	DESCRIPTION
60	-----	2	GRIP, Starter Rope -(Part information located in Flywheel/Ignition/Starter Group.)
65	-----	3	SCREW -(Part information located in Flywheel/Ignition/Starter Group.)
281	-----	1	PANEL, Control -(Part information located in Controls Group.)
304	597073	1	HOUSING, Blower -(For use on engines without electric start & without regulator)
305	597078	4	SCREW -(Blower Housing)
608	-----	2	STARTER, Rewind -(Part information located in Flywheel/Ignition/Starter Group.)
663	-----	2	SCREW -(Part information located in Controls Group.)
1036	-----	1	LABEL, Emissions -(Available from a Briggs & Stratton Authorized Dealer)
1319	797669	1	LABEL, Warning -(REQUIRED When Replacing Parts With Warning Labels Affixed)
1515	-----	1	NUT, Hex Flange -(Part information located in Controls Group.)

Not For Reproduction

Copyright © Briggs & Stratton. All Rights reserved

Carburetor Group

Mfg. No: 12V332-0004-F1

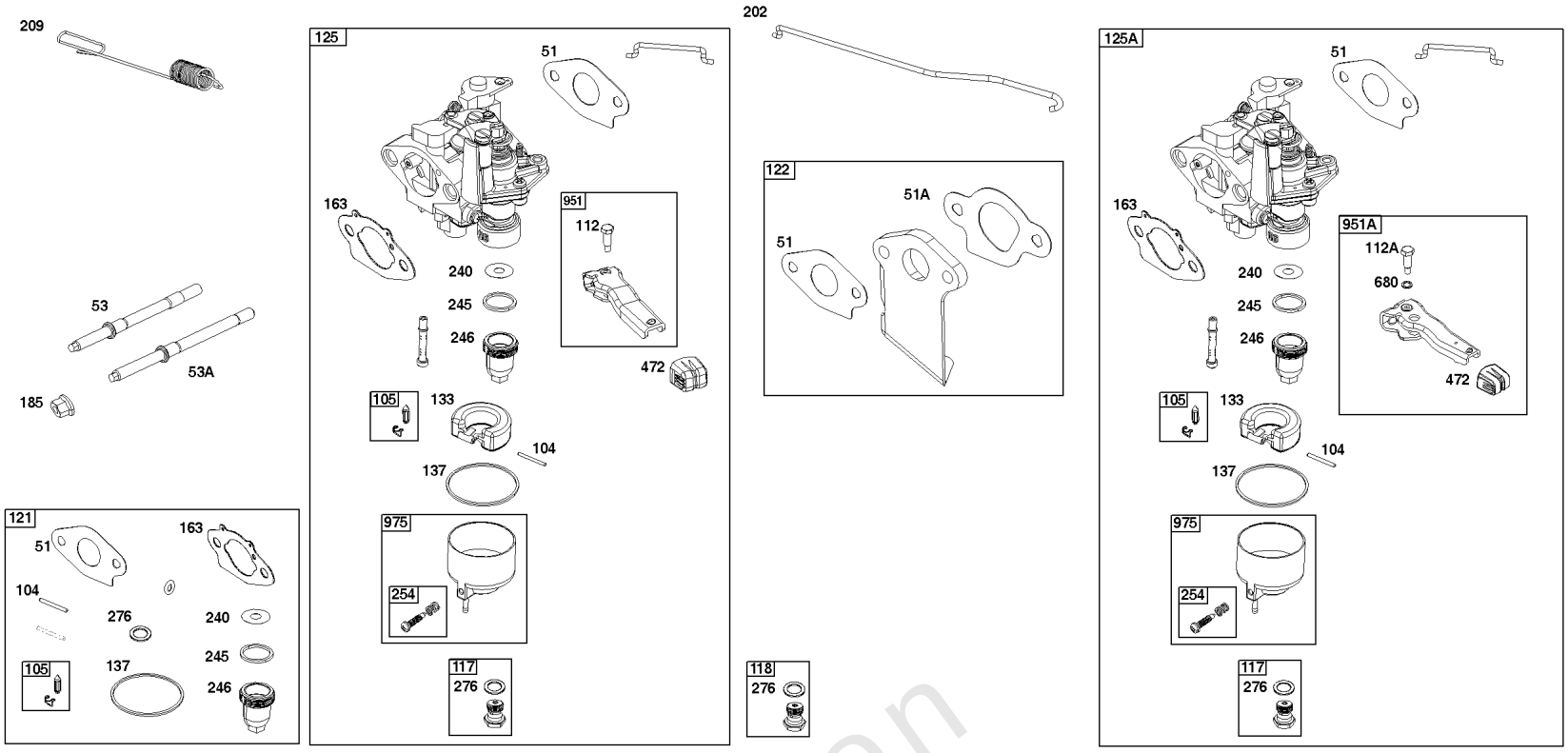

Not For Reproduction

Copyright © Briggs & Stratton. All Rights reserved

Carburetor Group

REF NO	PART NO	QTY	DESCRIPTION
51	596769	1	GASKET, Intake
51A	596770	1	GASKET, Intake
53	597052	1	STUD -(Carburetor) (Short)
53A	597051	1	STUD -(Carburetor) (Long)
104	597533	1	PIN, Float Hinge
105	797139	1	VALVE, Float Needle
112	84005081	1	SCREW -(Choke Lever) -Used Before Code Date 19060100
112A	84003640	1	SCREW -(Choke Lever) -Used After Code Date 19053100
117	597453	1	JET, Main -(Standard) -Used Before Code Date 19060100
117	84004447	1	JET, Main -(Standard) -Used After Code Date 19053100
118	597454	1	JET, Main -(High Altitude) -Used Before Code Date 19060100
118	597048	1	JET, Main -(High Altitude) -Used After Code Date 19053100
121	597138	1	KIT, Carburetor Overhaul -(Service Kits may include extra parts not specific to this engine.)
122	84003331	1	SPACER, Carburetor
125	596764	1	CARBURETOR -Used Before Code Date 19060100
125A	84002952	1	CARBURETOR ASSEMBLY -Used After Code Date 19053100
133	597473	1	FLOAT, Carburetor
137	798932	1	GASKET, Float Bowl
163	596768	1	GASKET, Air Cleaner
185	-----	1	NUT -(Part information located in Air Cleaner Group.)
202	597033	1	LINK, Mechanical Governor
209	597115	1	SPRING, Governor
240	597039	1	FILTER, Fuel
245	597042	1	GASKET, Fuel Bowl -(Use Before Date Code 18051700)
245	597735	1	GASKET, Fuel Bowl -(Use After Date Code 18051600)
246	597043	1	BOWL, Fuel Filter
254	595322	1	DRAIN, Carburetor Bowl
276	797632	1	WASHER, Sealing
472	84002963	1	KNOB, Control
680	84005074	1	WASHER -(Choke Lever)
951	597044	1	LEVER, Choke -Used Before Code Date 19060100
951A	84003872	1	LEVER, Choke -Used After Code Date 19053100
975	597049	1	BOWL, Float

Not For Reproduction

Copyright © Briggs & Stratton. All Rights reserved

Controls Group

Mfg. No: 12V332-0004-F1

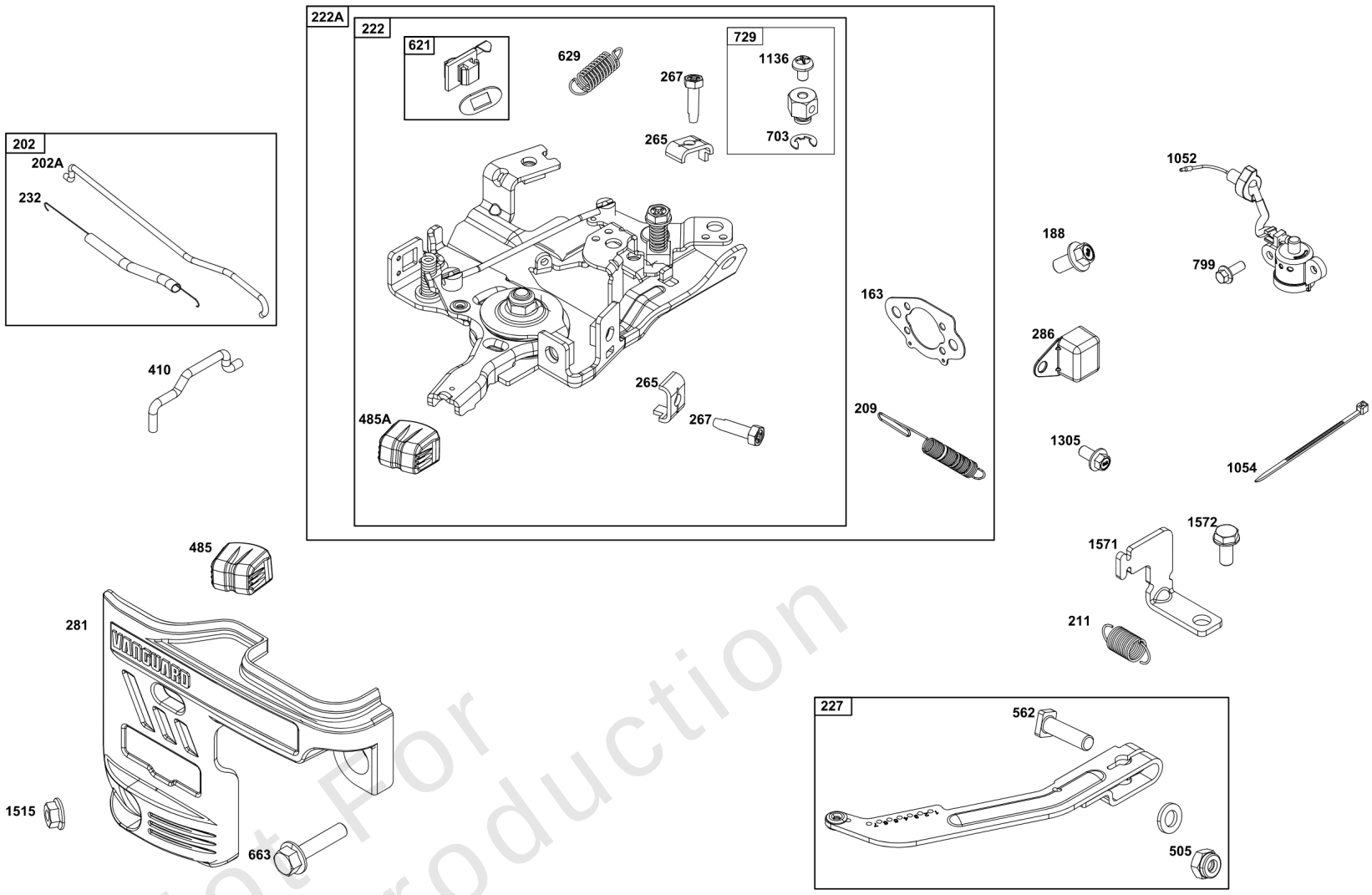

Not For Reproduction

Copyright © Briggs & Stratton. All Rights reserved

Controls Group

REF NO	PART NO	QTY	DESCRIPTION
163	-----	1	GASKET, Air Cleaner -(Part information located in Carburetor Group.)
188	590850	2	SCREW -(Control Bracket)
202	597032	1	LINK, Mechanical Governor
202A	597033	1	LINK, Mechanical Governor
209	84003519	1	SPRING, Governor -Used Before Code Date 20110600
209	84005970		SPRING, Governor -Used After Code Date 20110500
211	691278	1	SPRING, Governor
222A	84007746		BRACKET, Control -Used Before Code Date 20110600
222	84006188	1	BRACKET, Control -Used After Code Date 20110500
227	597028	1	LEVER, Governor Control
232	597034	1	SPRING, Governor Link
265	691024	2	CLAMP, Casing
267	597027	2	SCREW -(Casing Clamp)
281	597067	2	PANEL, Control
286	84002122	1	MODULE, Oil Sensor -Used After Code Date 18121400
286	590702	1	MODULE, Oil Sensor -Used Before Code Date 18121500
410	597024	1	LINK, Control
485	597025	1	KNOB, Control -Used Before Code Date 19051000
485A	84004631	1	KNOB, Control -Used After Code Date 19050900
505	590641	1	NUT -(Governor Control Lever)
562	597121	1	BOLT -(Governor Control Lever)
621	84007989	1	SWITCH, Stop
629	597022	1	SPRING, Throttle Return
663	597460	2	SCREW -(Control Panel)
703	597021	2	CLIP
729	597019	2	CLIP, Wire
799	-----	2	SCREW -(Part information located in Crankcase Cover/Sump and Lubrication Group.)
1052	-----	1	SENSOR, Oil -(Part information located in Crankcase Cover/Sump and Lubrication Group.)
1054	280275	1	TIE, Cable
1136	597020	2	SCREW -(Control Bracket)
1305	590703	1	SCREW
1515	590692	1	NUT -(Control Panel)
1571	597035	1	BRACKET, Governor Control
1572	597036	1	SCREW -(Governed Idle Spring Bracket)

Not For Reproduction

Copyright © Briggs & Stratton. All Rights reserved

Crankcase Cover/Sump and Lubrication Group

Mfg. No: 12V332-0004-F1

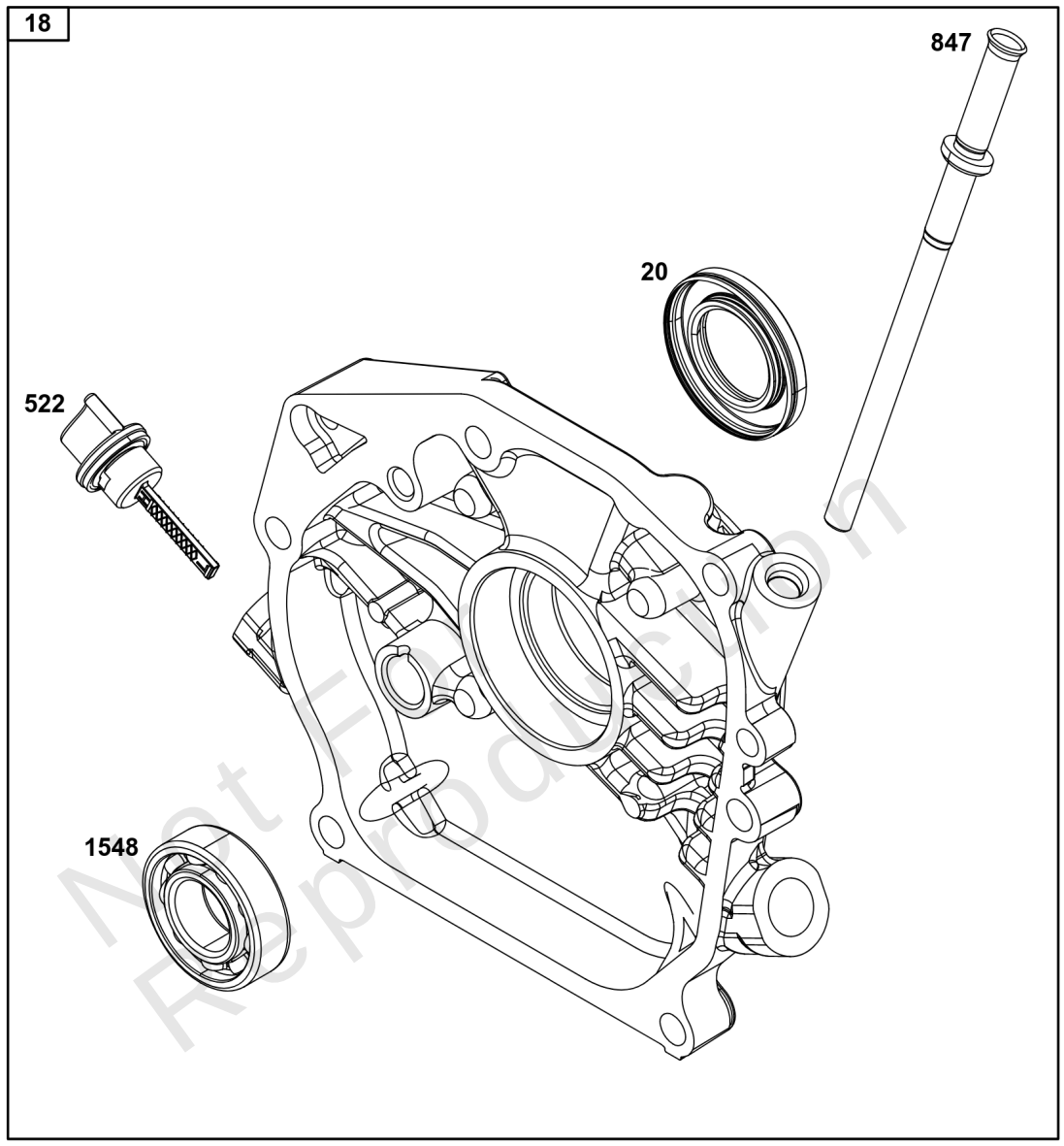

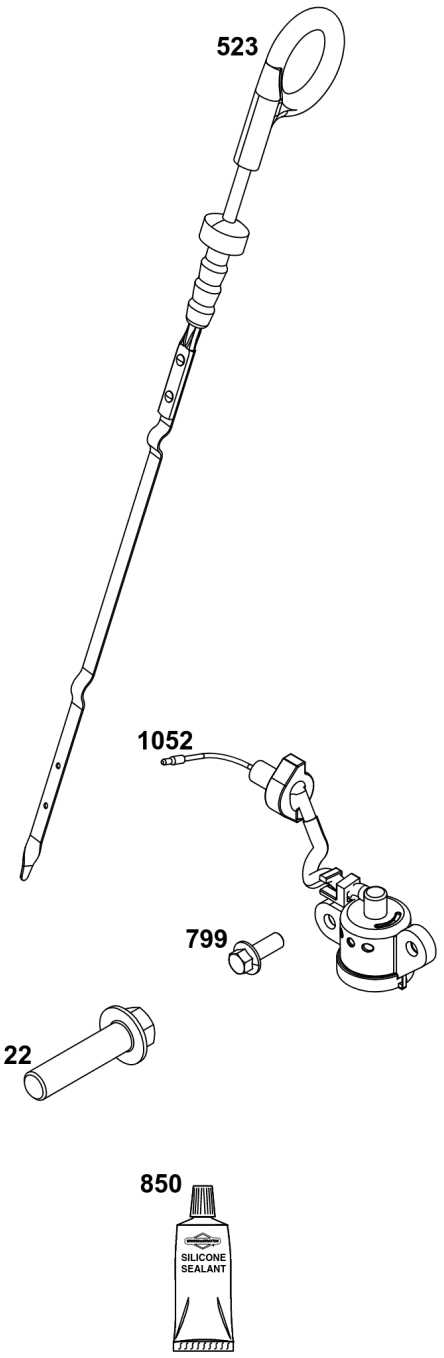

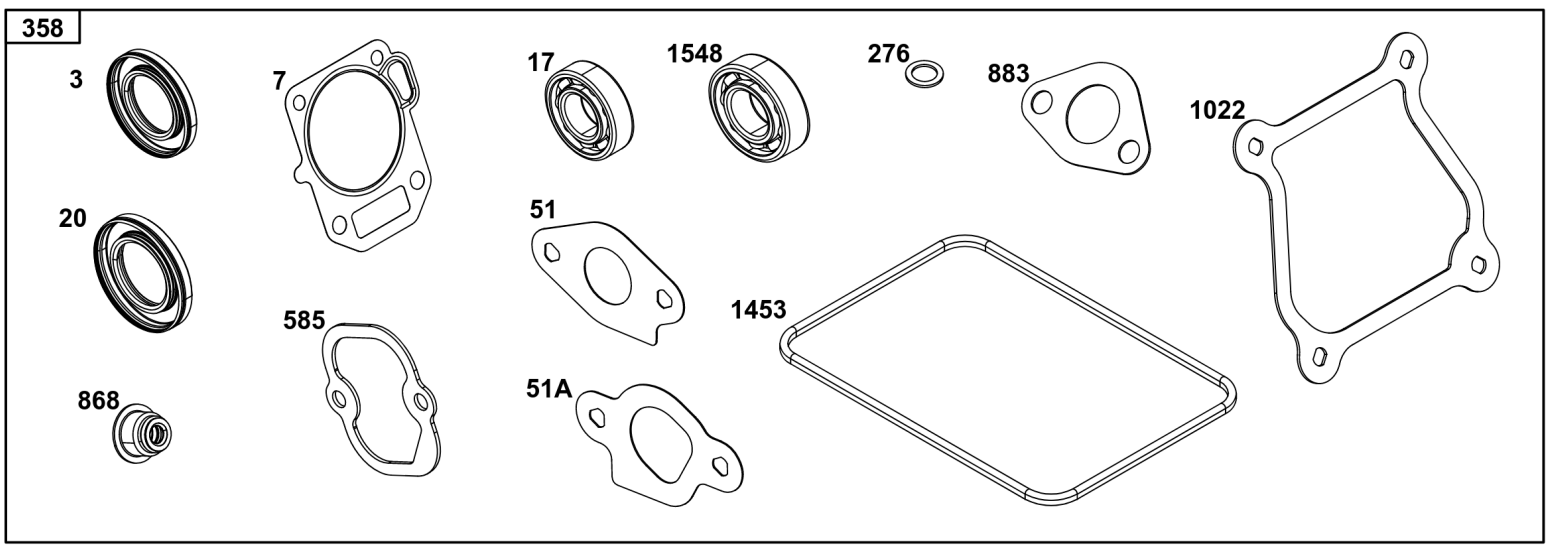

Not For Reproduction

Crankcase Cover/Sump and Lubrication Group

REF NO	PART NO	QTY	DESCRIPTION
3	-----	1	SEAL, Oil -(Part information located in Cylinder Group.)
7	-----	1	GASKET, Cylinder Head -(Part information located in Cylinder Head Group.)
17	-----	1	BEARING, Ball -(Part information located in Cylinder Group.)
18	596986	1	COVER, Crankcase
20	596991	1	SEAL, Oil -(PTO Side)
22	590714	6	SCREW
51	-----	1	GASKET, Intake -(Part information located in Cylinder Head Group.)
51A	-----	1	GASKET, Intake -(Part information located in Cylinder Head Group.)
276	-----	1	WASHER, Sealing -(Part information located in Carburetor Group.)
358	-----	1	GASKET SET, Engine -(Part information located in Cylinder Group.)
522	590716	2	PLUG, Dipstick/Fill
523	596992	1	DIPSTICK
585	-----	1	GASKET, Breather Passage -(Part information located in Cylinder Head Group.)
799	590703	2	SCREW -(Oil Sensor)
847	596989	1	DIPSTICK/TUBE ASSEMBLY
850	100106		SEALANT, Liquid
868	-----	1	SEAL, Valve -(Part information located in Cylinder Head Group.)
883	-----	1	GASKET, Exhaust -(Part information located in Exhaust Group.)
1022	-----	1	GASKET, Rocker Cover -(Part information located in Cylinder Head Group.)
1052	84004948	1	SENSOR, Oil
1453	-----	1	SEAL, Air Cleaner Cover -(Part information located in Air Cleaner Group.)
1548	596990	1	BEARING, Ball -(Crankcase Cover/Sump) (Crankshaft)

Not For Reproduction

Copyright © Briggs & Stratton. All Rights reserved

Crankshaft Group

Mfg. No: 12V332-0004-F1

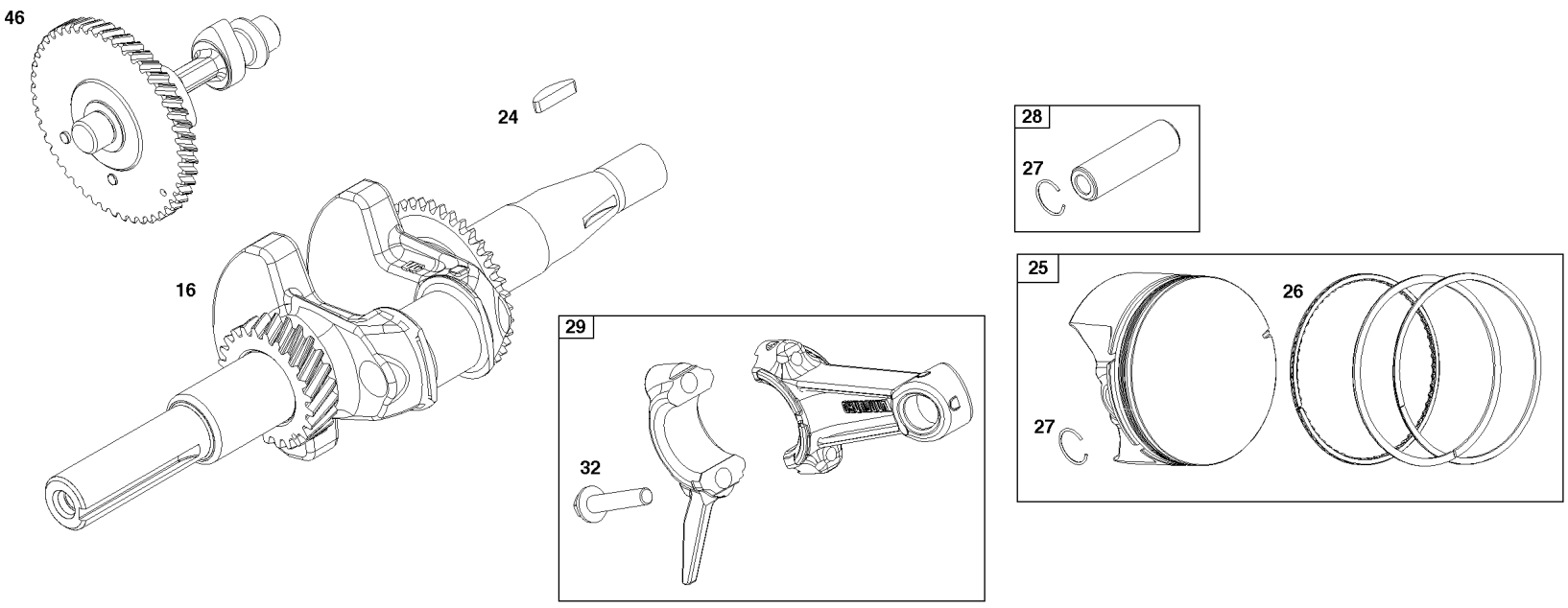

Not For Reproduction

Copyright © Briggs & Stratton. All Rights reserved

Crankshaft Group

REF NO	PART NO	QTY	DESCRIPTION
16	596958	1	CRANKSHAFT
24	596976	1	KEY, Flywheel
25	596977	1	PISTON ASSEMBLY
25	596978	1	PISTON ASSEMBLY -(.020" Oversize)
26	596979	1	SET, Ring
26	596980	2	SET, Ring -(.020" Oversize)
27	596982	2	LOCK, Piston Pin
28	596981	1	PIN, Piston
29	596983	1	ROD, Connecting
32	596984	2	SCREW -(Connecting Rod)
46	596993	1	CAMSHAFT
357	692191	1	KEY, Drive Pulley

Not For Reproduction

Copyright © Briggs & Stratton. All Rights reserved

Cylinder Group

Mfg. No: 12V332-0004-F1

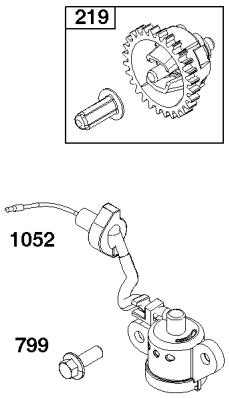

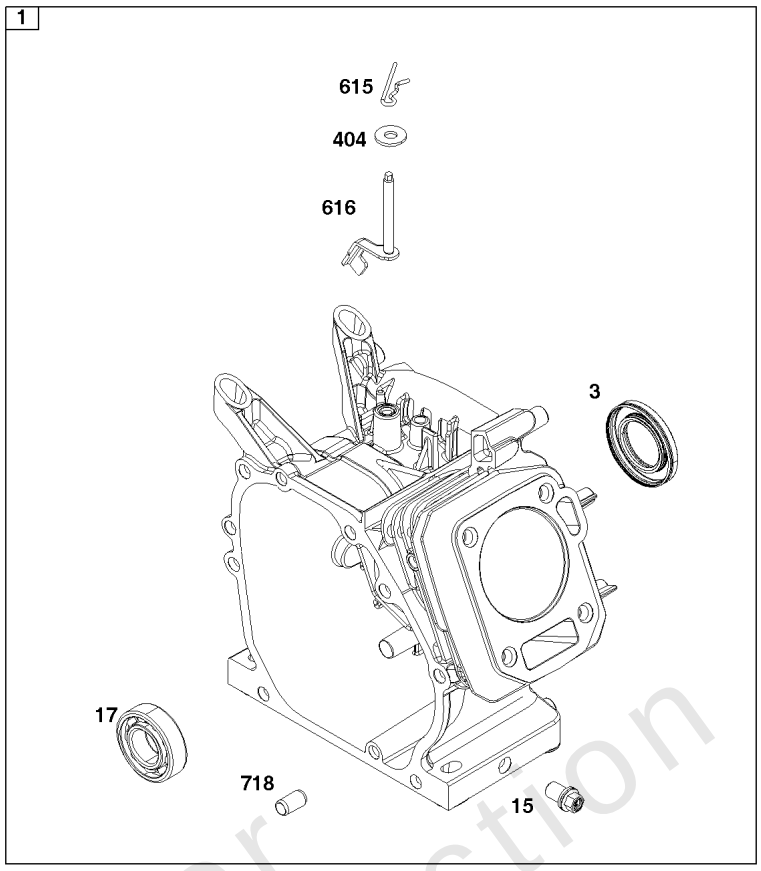

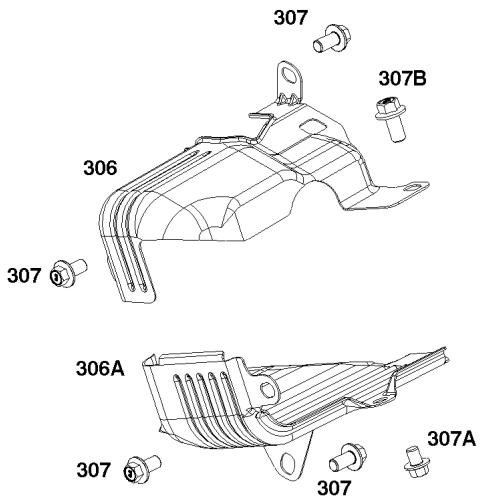

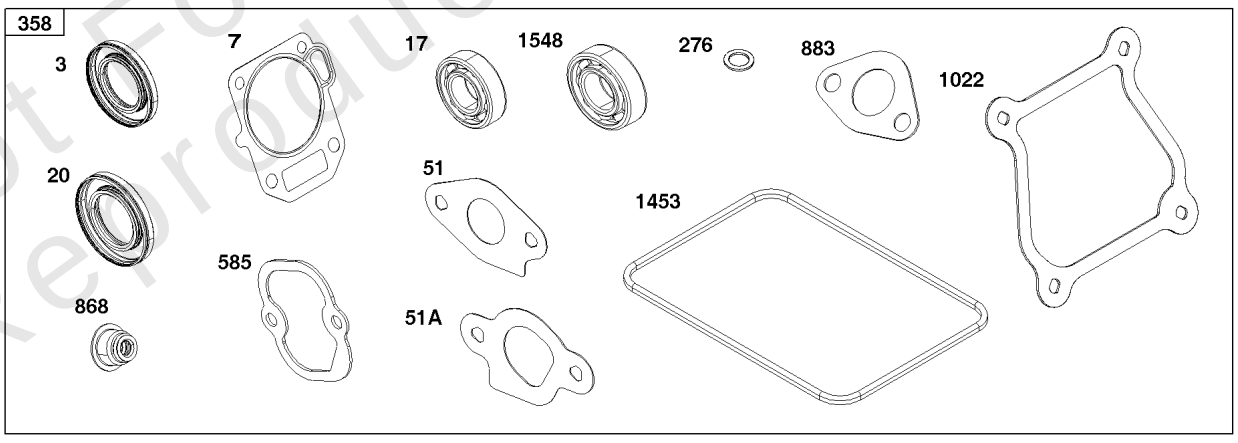

Not For Reproduction

Cylinder Group

REF NO	PART NO	QTY	DESCRIPTION
1	596995	1	CYLINDER ASSEMBLY
3	84002132	2	SEAL, Oil -(Magneto Side)
7	-----	1	GASKET, Cylinder Head -(Part information located in Cylinder Head Group.)
15	590678	2	PLUG, Oil Drain
17	596990	1	BEARING, Ball -(Cylinder) (Crankshaft)
20	-----	1	SEAL, Oil -(Part information located in Crankcase Cover/Sump and Lubrication Group.)
51	-----	1	GASKET, Intake -(Part information located in Carburetor Group.)
51A	-----	1	GASKET, Intake -(Part information located in Carburetor Group.)
219	597038	1	GEAR, Governor
276	797632	1	WASHER, Sealing
306	597076	1	SHIELD, Cylinder
306A	597077	1	SHIELD, Cylinder
307	590850	3	SCREW -(Cylinder Shield)
307A	590683	3	SCREW -(Cylinder Shield)
307B	590850	1	SCREW -(Cylinder Shield)
358	597139	1	GASKET SET, Engine
404	597030	1	WASHER -(Governor Crank)
585	-----	1	GASKET, Breather Passage -(Part information located in Cylinder Head Group.)
615	597031	1	RETAINER, Governor Shaft
616	597029	1	CRANK, Governor
718	590713	2	PIN, Locating
799	-----	2	SCREW -(Part information located in Crankcase Cover/Sump and Lubrication Group.)
850	-----	1	SEALANT, Liquid -(Part information located in Crankcase Cover/Sump and Lubrication Group.)
868	597001	1	SEAL, Valve
883	-----	1	GASKET, Exhaust -(Part information located in Exhaust Group.)
1022	-----	1	GASKET, Rocker Cover -(Part information located in Cylinder Head Group.)
1052	-----	1	SENSOR, Oil -(Part information located in Crankcase Cover/Sump and Lubrication Group.)
1453	-----	1	SEAL, Air Cleaner Cover -(Part information located in Air Cleaner Group.)
1548	-----	1	BEARING, Ball -(Part information located in Crankcase Cover/Sump and Lubrication Group.)

Not For Reproduction

Copyright © Briggs & Stratton. All Rights reserved

Cylinder Head Group

Mfg. No: 12V332-0004-F1

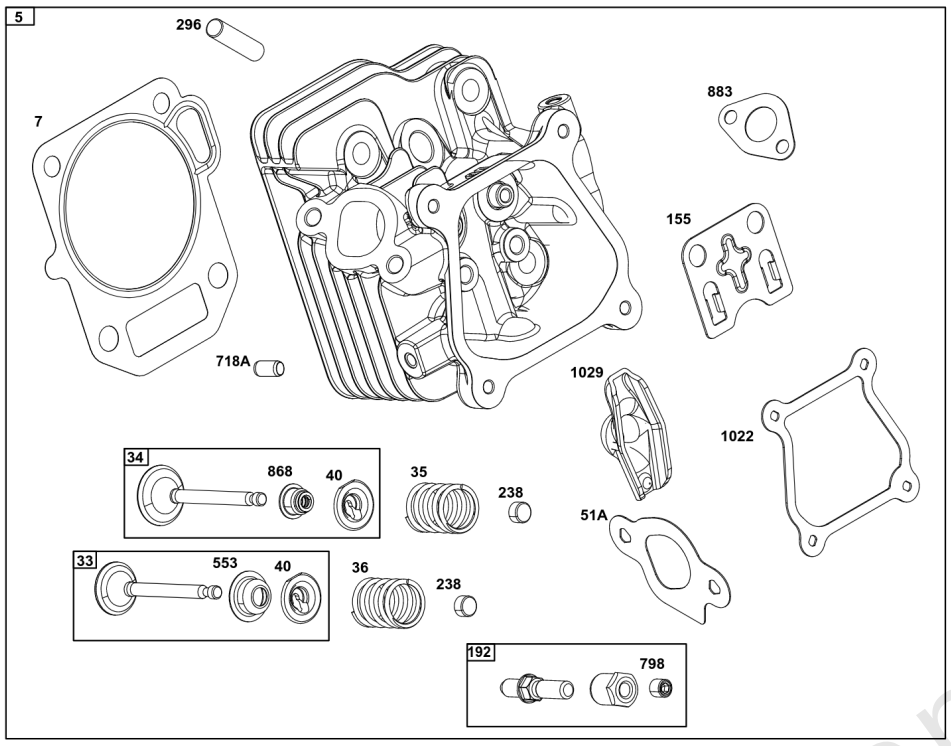

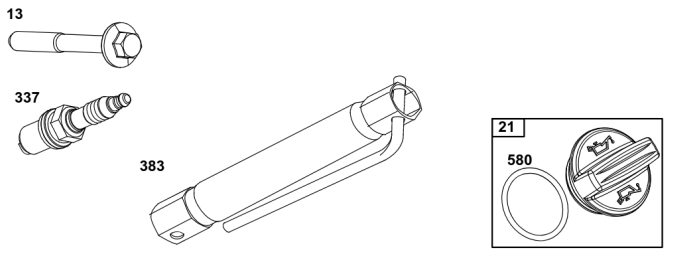

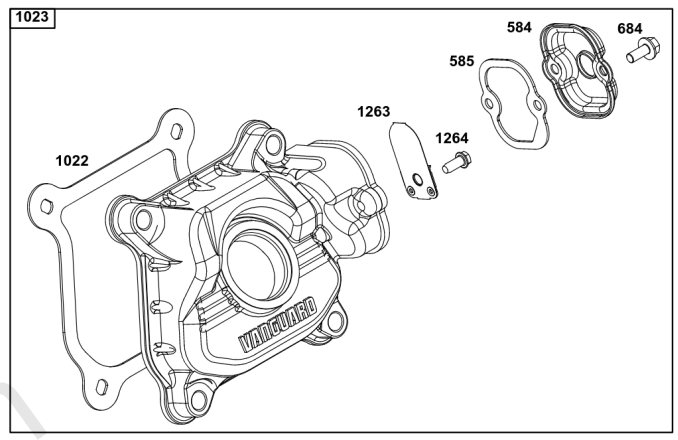

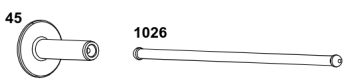

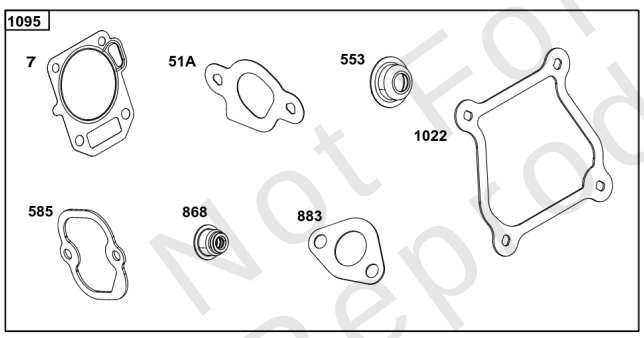

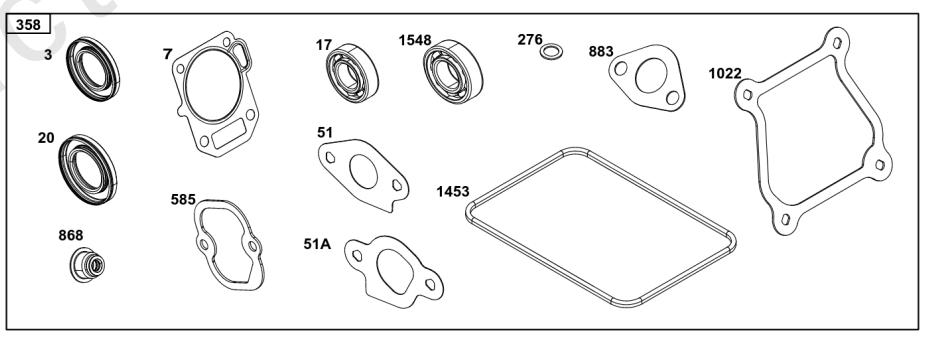

Not For Reproduction

Copyright © Briggs & Stratton. All Rights reserved

Cylinder Head Group

REF NO	PART NO	QTY	DESCRIPTION
3	-----	1	SEAL, Oil -(Part information located in Cylinder Group.)
5	596998	1	HEAD, Cylinder
7	597007	1	GASKET, Cylinder Head
13	597008	4	SCREW -(Cylinder Head)
17	-----	1	BEARING, Ball -(Part information located in Cylinder Group.)
20	-----	1	SEAL, Oil -(Part information located in Crankcase Cover/Sump and Lubrication Group.)
21	597014	1	CAP, Oil Fill
33	597005	1	VALVE, Exhaust
34	597004	1	VALVE, Intake
35	597002	1	SPRING, Valve -(Intake)
36	597002	1	SPRING, Valve
40	590654	2	RETAINER, Valve
45	591449	2	TAPPET, Valve
51	596769	1	GASKET, Intake
51A	596770	1	GASKET, Intake
155	592874	1	PLATE, Cylinder Head
192	597006	2	ADJUSTER, Rocker Arm
238	590649	2	CAP, Valve
276	-----	1	WASHER, Sealing -(Part information located in Carburetor Group.)
296	590631	2	STUD -(Muffler)
337	597383	2	PLUG, Spark
358	-----		GASKET SET, Engine -(Part information located in Cylinder Group.)
383	19576S	1	WRENCH, Spark Plug
553	597003	1	RETAINER, Valve Spring
580	809894	1	SEAL, O-Ring -(Oil Fill Cap)
584	597011	1	COVER, Breather Passage
585	597010	1	GASKET, Breather Passage
684	597012	2	SCREW -(Breather Passage Cover)
718A	590637	2	PIN, Locating
798	597000	2	SCREW -(Rocker Arm)
850	-----	1	SEALANT, Liquid -(Part information located in Crankcase Cover/Sump and Lubrication Group.)
868	597001	1	SEAL, Valve
883	597072	1	GASKET, Exhaust
914	597016	4	SCREW -(Rocker Cover)
1022	597015	1	GASKET, Rocker Cover
1023	597009	1	COVER, Rocker
1026	597017	2	ROD, Push
1029	596999	2	ARM, Rocker
1095	597140	1	GASKET SET, Valve -(Service Kits may include extra parts not specific to this engine.)
1263	697124	1	REED, Breather
1264	793453	1	SCREW -(Breather Reed)

Not For Reproduction

Copyright © Briggs & Stratton. All Rights reserved

Cylinder Head Group

Mfg. No: 12V332-0004-F1

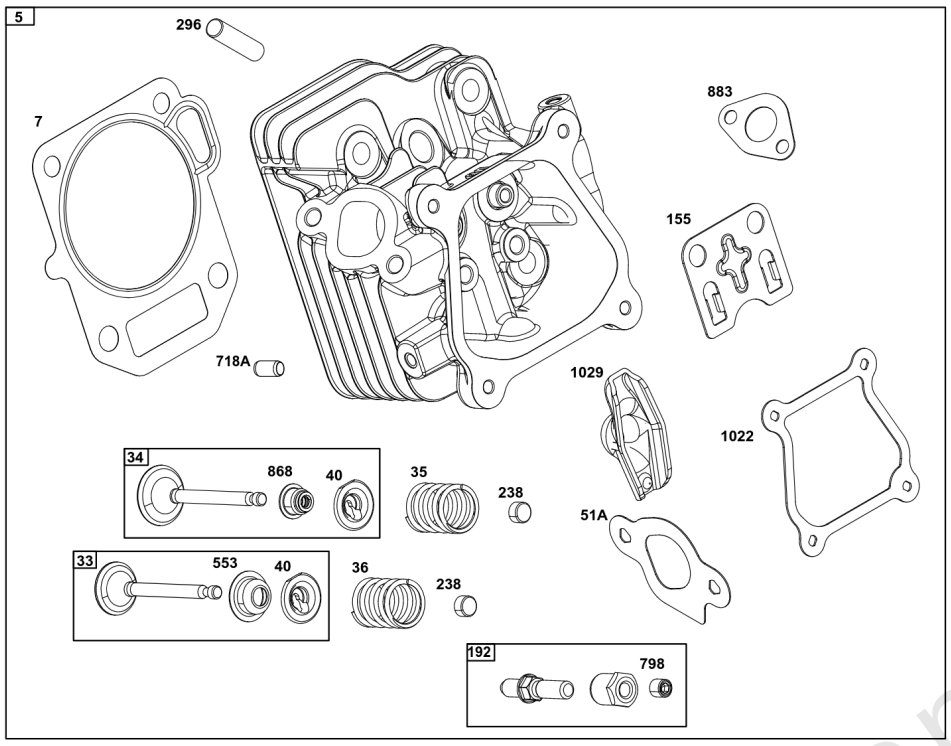

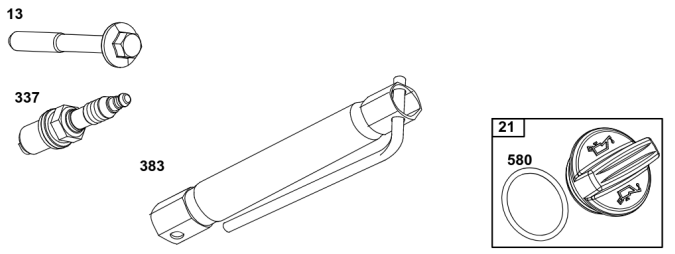

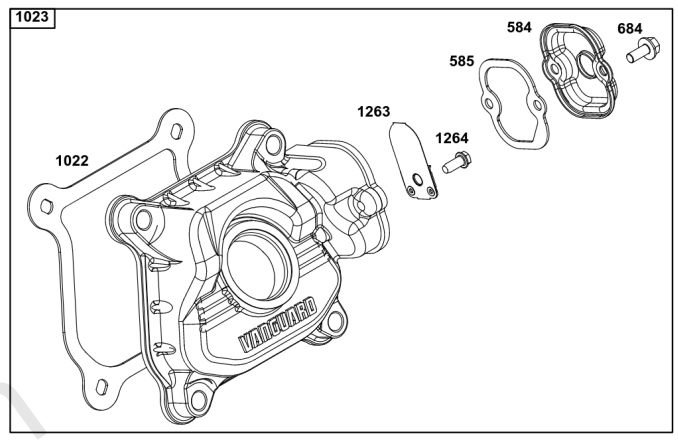

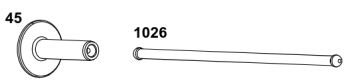

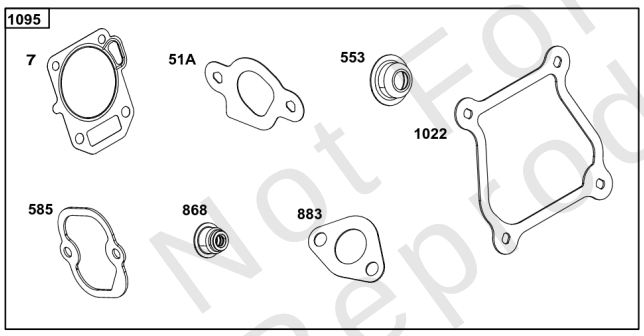

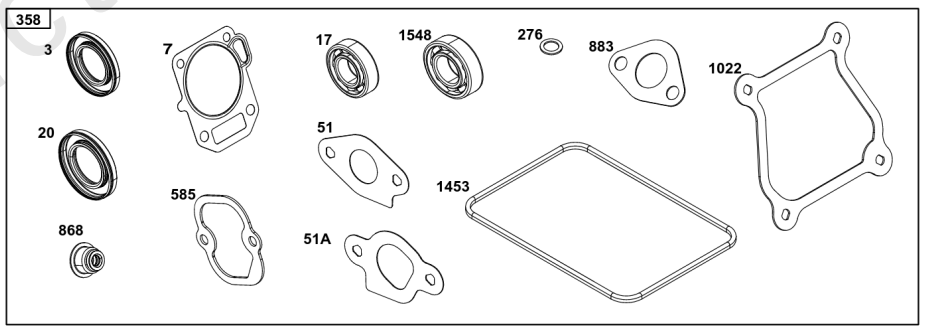

Not For Reproduction

Cylinder Head Group

REF NO	PART NO	QTY	DESCRIPTION
1453	-----	1	SEAL, Air Cleaner Cover -(Part information located in Air Cleaner Group.)
1548	-----	1	BEARING, Ball -(Part information located in Crankcase Cover/Sump and Lubrication Group.)

Not For Reproduction

Copyright © Briggs & Stratton. All Rights reserved

Exhaust Group

Mfg. No: 12V332-0004-F1

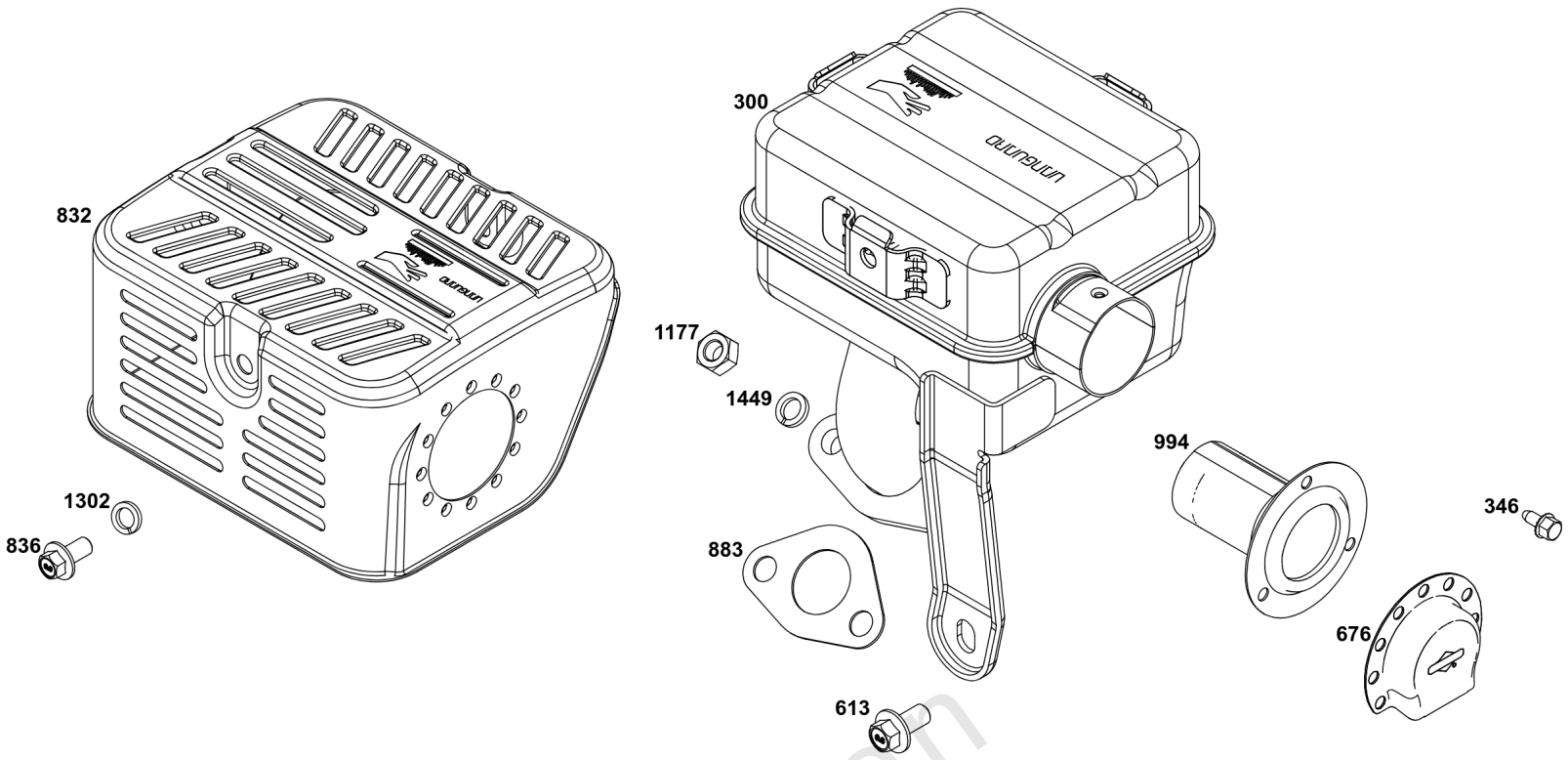

Not For Reproduction

Copyright © Briggs & Stratton. All Rights reserved

Exhaust Group

REF NO	PART NO	QTY	DESCRIPTION
300	84003121	1	MUFFLER ASSEMBLY -Used Before Code Date 19061200
300	84003517	1	MUFFLER ASSEMBLY -Used After Code Date 19061100
346	699203	3	SCREW -(Spark Arrestor)
613	590850	1	SCREW -(Muffler)
676	798467	1	DEFLECTOR, Muffler
832	597069	1	GUARD, Muffler
836	590706	3	SCREW -(Muffler Guard)
883	597072	1	GASKET, Exhaust
994	793985	1	ARRESTOR, Spark
1177	590632	2	NUT -(Muffler)
1302	704133	3	LOCKWASHER, Split,1/4 -(Muffler Guard)
1449	590633	2	WASHER

Not For Reproduction

Copyright © Briggs & Stratton. All Rights reserved

Flywheel, Ignition, and Starter Group

Mfg. No: 12V332-0004-F1

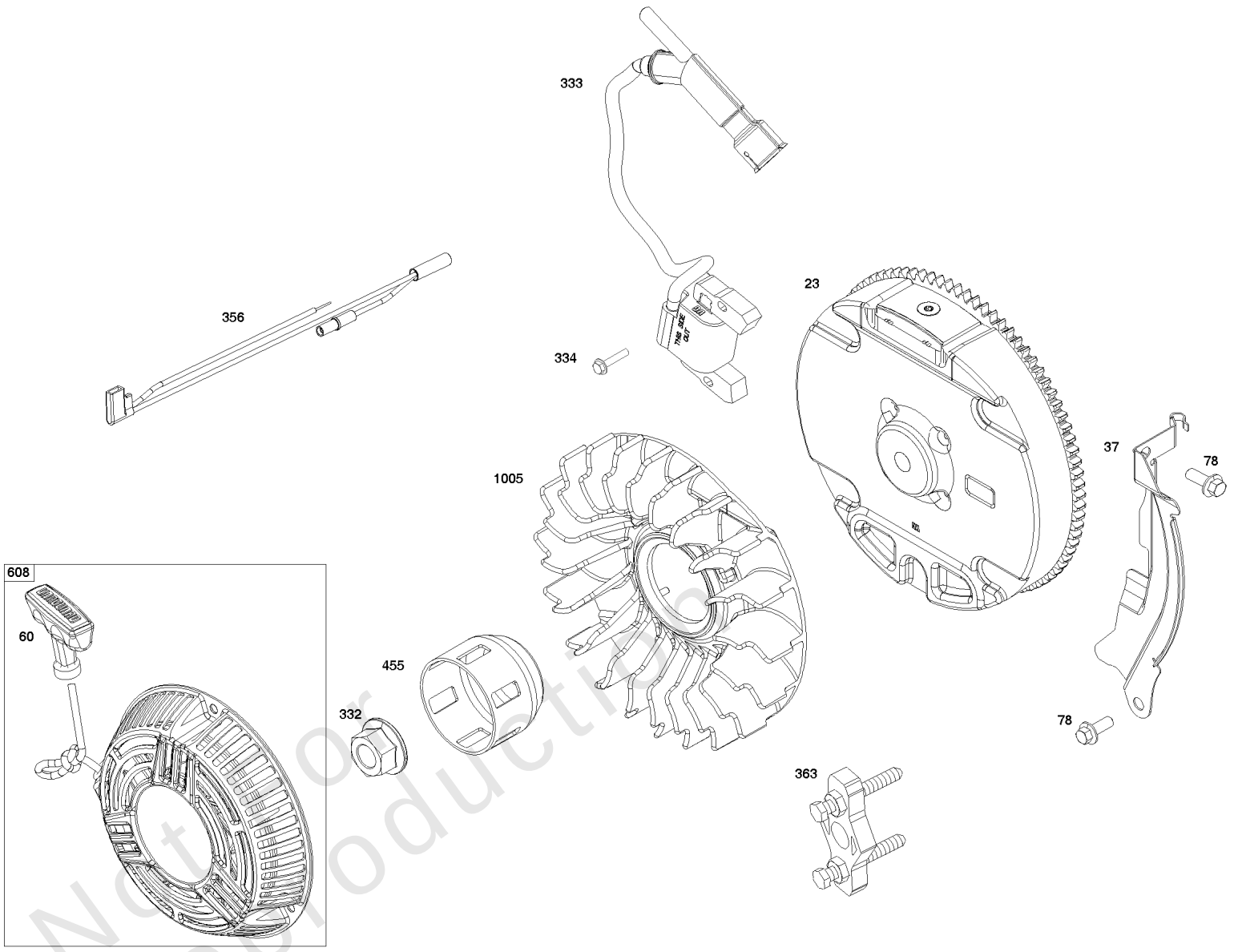

Not for Reproduction

Copyright © Briggs & Stratton. All Rights reserved

Flywheel, Ignition, and Starter Group

REF NO	PART NO	QTY	DESCRIPTION
23	597085	1	FLYWHEEL
37	597075	1	GUARD, Flywheel
60	597080	2	GRIP, Starter Rope
65	590683	2	SCREW -(Rewind Starter)
78	590850	3	SCREW -(Flywheel Guard)
332	591988	1	NUT
333	596763	2	ARMATURE, Magneto
334	699477	2	SCREW -(Magneto Armature)
356	597054	1	WIRE, Stop
363	19203	1	PULLER, Flywheel
455	597088	1	CUP, Flywheel
608	596772	2	STARTER, Rewind
1005	794273	1	FAN, Flywheel

Not For Reproduction

Copyright © Briggs & Stratton. All Rights reserved

Fuel Supply Group

Mfg. No: 12V332-0004-F1

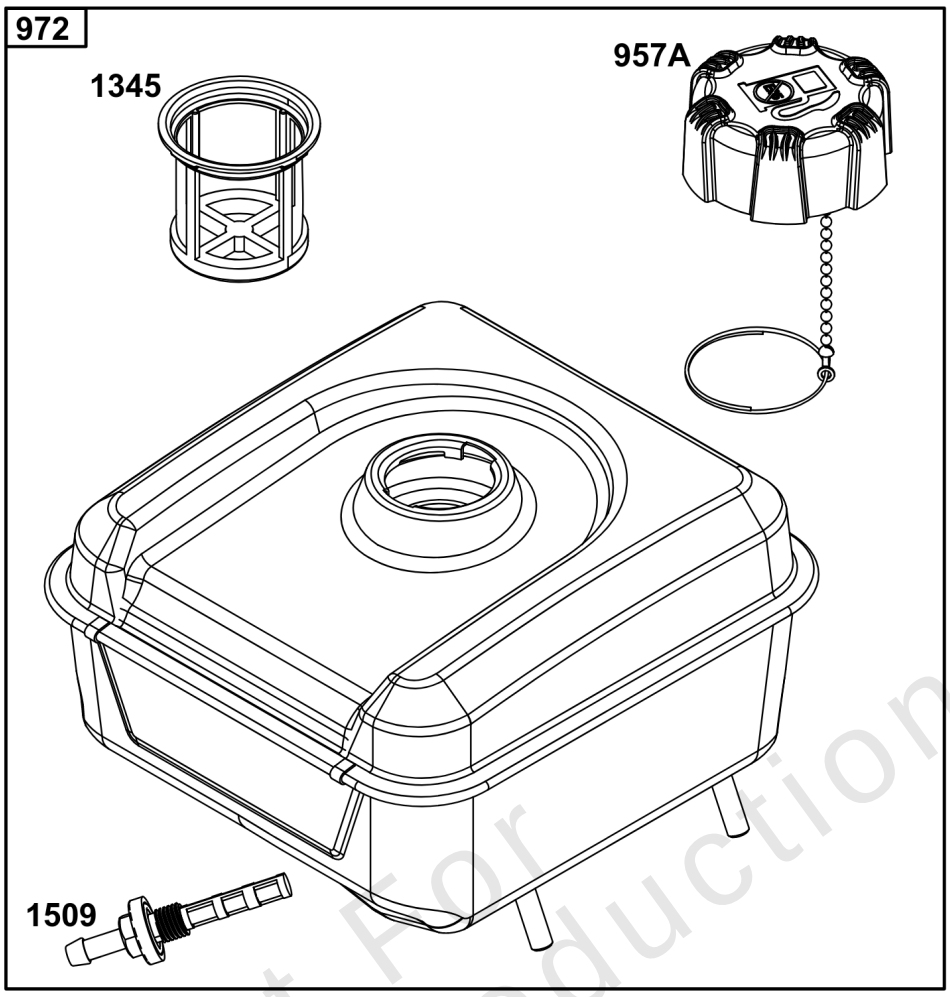

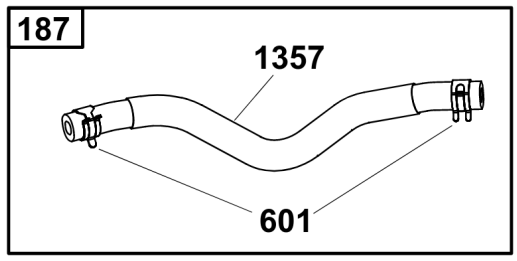

Not For Reproduction

Copyright © Briggs & Stratton. All Rights reserved

Fuel Supply Group

REF NO	PART NO	QTY	DESCRIPTION
187	597058	1	LINE, Fuel
190	591476	1	SCREW -(Fuel Tank)
601	791850	1	CLAMP, Hose
705	707919	2	NUT -(Fuel Tank)
957A	596765	1	CAP, Fuel Tank
972	597057	1	TANK, Fuel
1345	792917	1	FILTER, Filler Neck
1357	597058	1	LINE, Fuel
1509	797346	1	OUTLET, Tank

Not For Reproduction

Copyright © Briggs & Stratton. All Rights reserved

VANGUARD®

COMMERCIAL POWER

BRIGGS & STRATTON®

Copyright © Briggs & Stratton. All Rights reserved

18-Apr-2024