Parts Manual

Mfg. No: 49X977-0002-G1

Copyright © Briggs & Stratton. All Rights reserved

Model Components

Page

Replacement Engine - US & Canada. 4
Model 40, 44 & 49 Engine Accessories Catalog. 5
Maintenance Kits. 6
Engine Mounted Below Deck Mufflers. 8
Engine Mounted Above Deck Mufflers. 10
Spark Arrester/Deflector. 12
Lubrication. 14
Implement Mounted Above Deck Mufflers. 16
Exhaust/Muffler Configurations. 18
Electrical. 20
Flywheel Guards. 22
Speed Control. 24
Muffler Mounting Hardware. 26

Not For Reproduction

Copyright © Briggs & Stratton. All Rights reserved

Replacement Engine - US & Canada

REF NO	PART NO	QTY	DESCRIPTION
	49X9770005J1	1	Replacement Engine
	-----		Idle Speed: 1750
	-----		Top No-Load Speed: 3600

Not For Reproduction

Copyright © Briggs & Stratton. All Rights reserved

Model 40, 44 & 49 Engine Accessories Catalog

Copyright © Briggs & Stratton. All Rights reserved

23-Apr-2024

9000

9000A

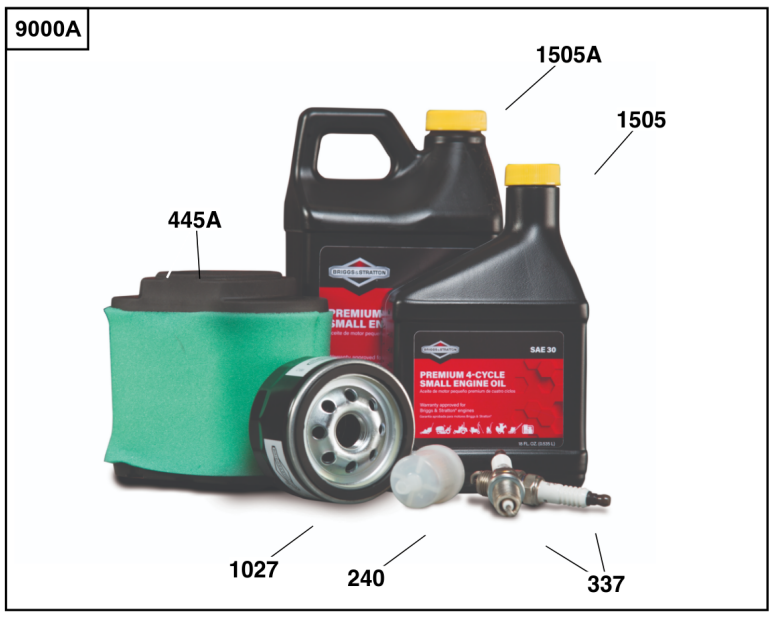

9000B

9000C

9000D

Reproduction

Copyright © Briggs & Stratton. All Rights reserved

Maintenance Kits

REF NO	PART NO	QTY	DESCRIPTION
9000	84002442		KIT, Maintenance -(Intek / EXi V-Twin Engines) (Do not use with Home Standby Generators.)
9000A	84002317		KIT, Maintenance -(Professional Series™ V-Twin Engines) (Do not use with Home Standby Generators.)
9000B	84002316		KIT, Maintenance -(Commercial Series V-Twin Engines) (Do not use with Home Standby Generators.)
9000C	84002318		KIT, Maintenance -(Oil Guard™ Engines) (Do not use with Home Standby Generators.)
9000D	84002315		KIT, Maintenance -(Non-Oil Guard™ Engines) (Do not use with Home Standby Generators.)
240	84001895	1	FILTER, Fuel -(40 Micron)
240A	845125	1	FILTER, Fuel -(20 Micron)
337	491055S	2	PLUG, Spark
445	594201	1	FILTER-A/C CARTRIDGE
445A	792105	1	FILTER, A/C Cartridge
445B	798897	1	FILTER, A/C Cartridge
445C	841497	1	FILTER, A/C Cartridge
967	797704	1	FILTER, Pre Cleaner
1027	492932S	1	FILTER, Oil -(Standard)
1027A	696854	1	FILTER, Oil -(Premium)
1027B	842921	1	FILTER, Oil -(Vanguard®)
1027C	84007094	1	FILTER, OIL -(Oil Guard™)
1505	100005		OIL-4 CYCLE 30W 18OZ. -(18 oz. Bottle)
1505A	100028		OIL-4 CYCLE30W 48OZ -(48 oz. Bottle)
1505B	100170		OIL-5QT VANGUARD (CASE) -(5 qt. Bottle)
1505C	100169		OIL-1QT VANGUARD (CASE) -(1 qt. Bottle)

Not For Reproduction

Copyright © Briggs & Stratton. All Rights reserved

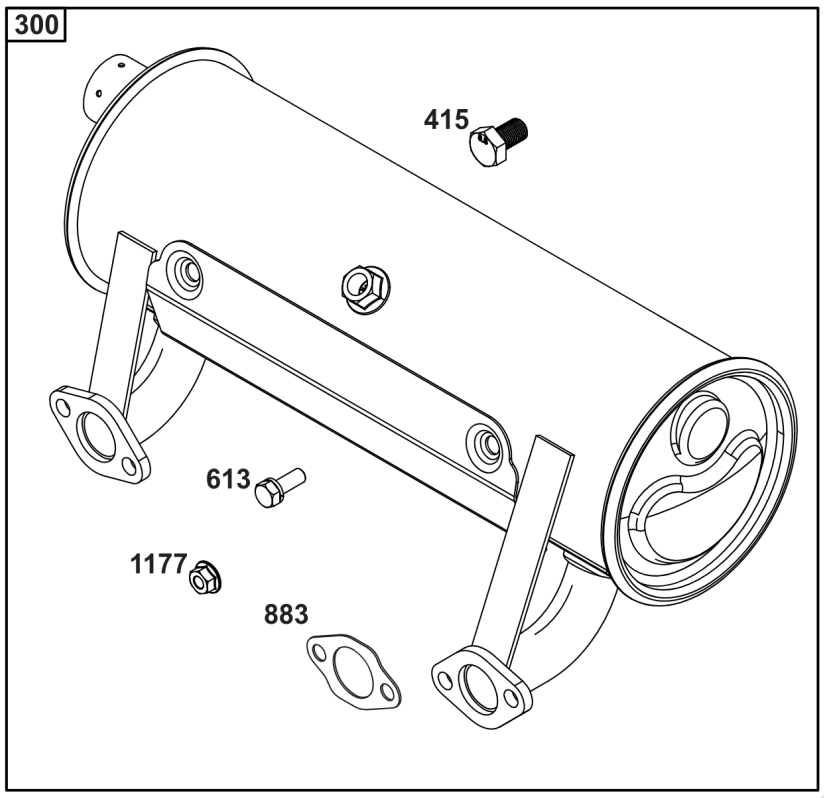

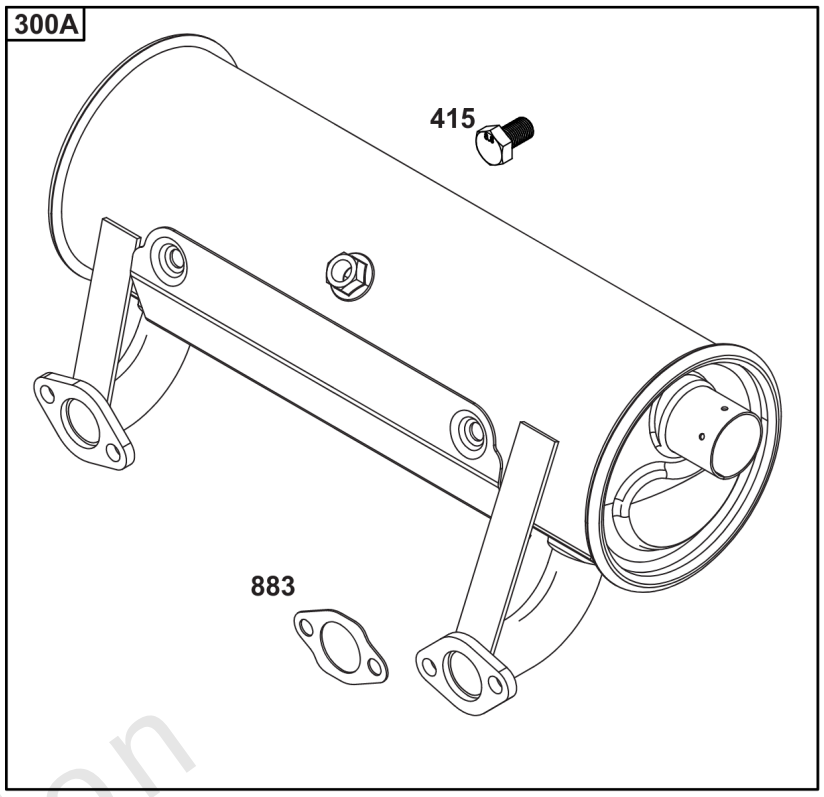

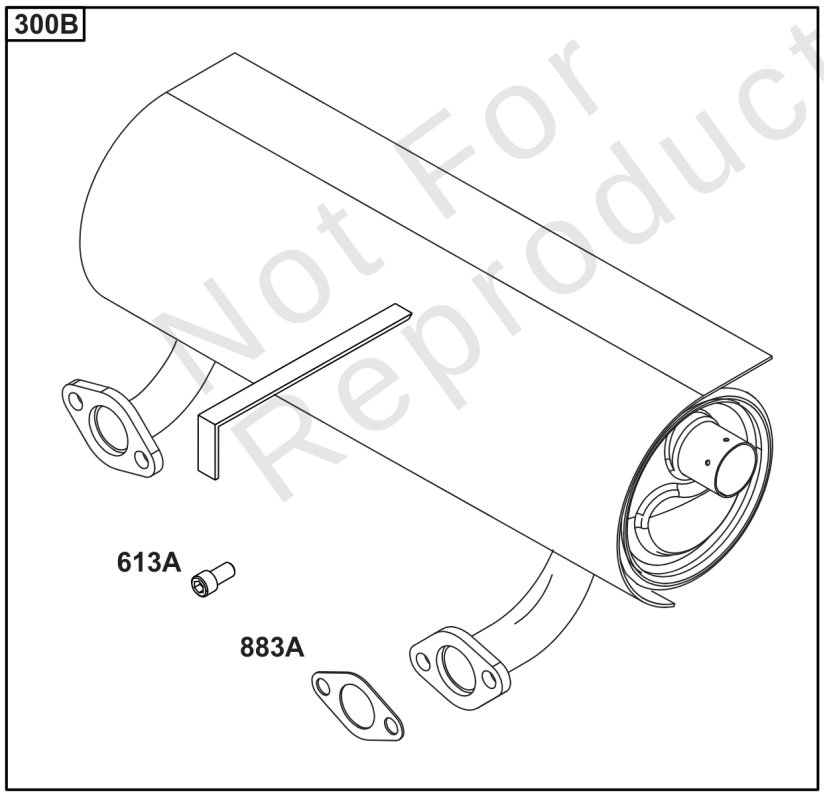

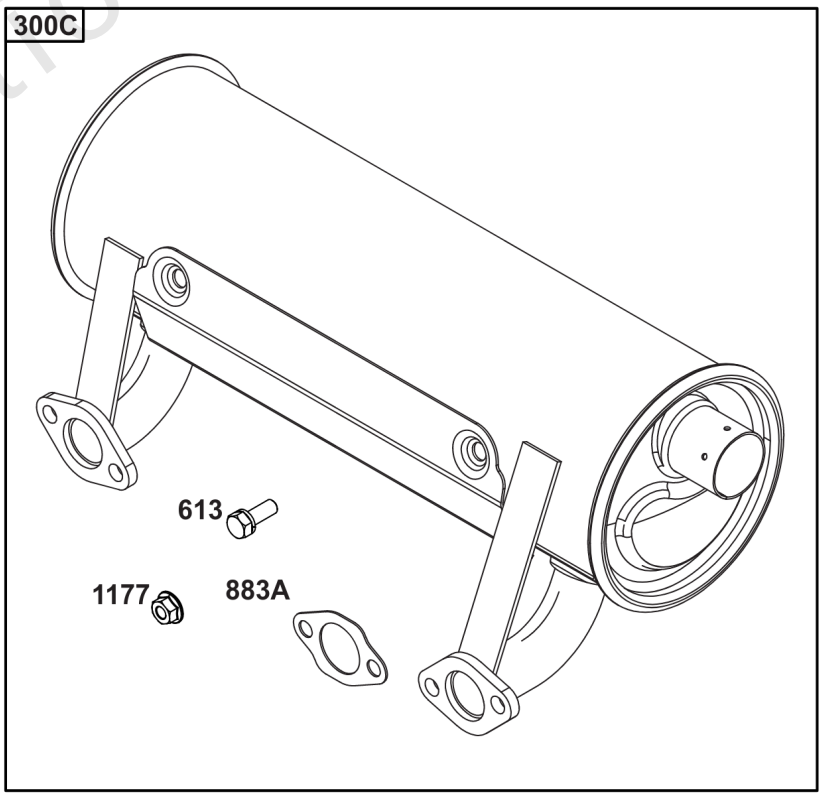

Not For Reproduction

Copyright © Briggs & Stratton. All Rights reserved

Engine Mounted Below Deck Mufflers

REF NO	PART NO	QTY	DESCRIPTION
300	594584	1	KIT-MUFFLER/GUARD -(Oil Filter Side Outlet) (Engine Supported) (O2 Sensor Port)
300A	593877	1	MUFFLER -(Starter Side Outlet) (Engine Supported) (O2 Sensor Port)
300B	594583	1	MUFFLER -(Starter Side Outlet) (Engine Supported) (No O2 Sensor Port)
300C	692120	1	MUFFLER -(Starter Side Outlet) (No O2 Sensor Port)
415	596859	1	PLUG -(O2 Sensor Port)
613	690341	4	SCREW -(Muffler)
613A	690363	4	SCREW -(Muffler)
883	594365	2	GASKET, Exhaust
883A	690970	2	GASKET, Exhaust
1177	690941	4	NUT -(Muffler)

Not For Reproduction

Copyright © Briggs & Stratton. All Rights reserved

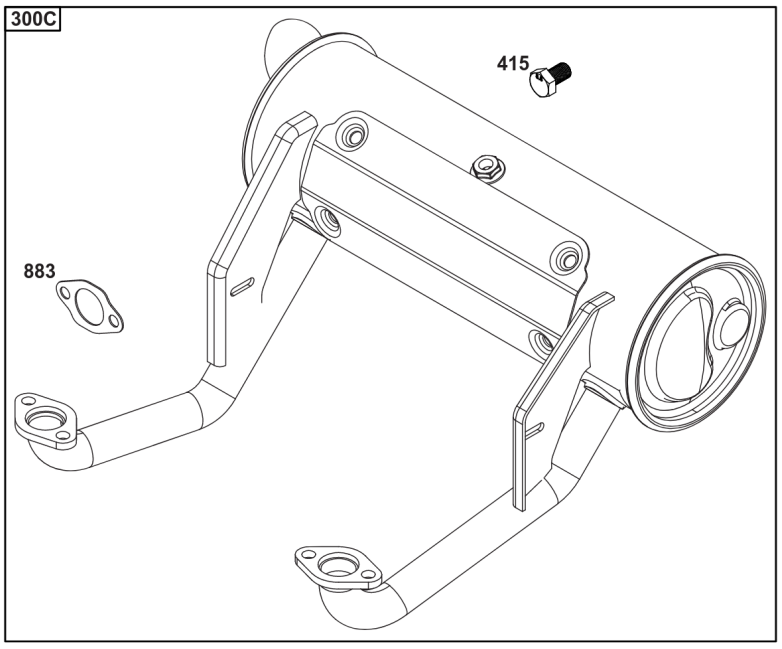

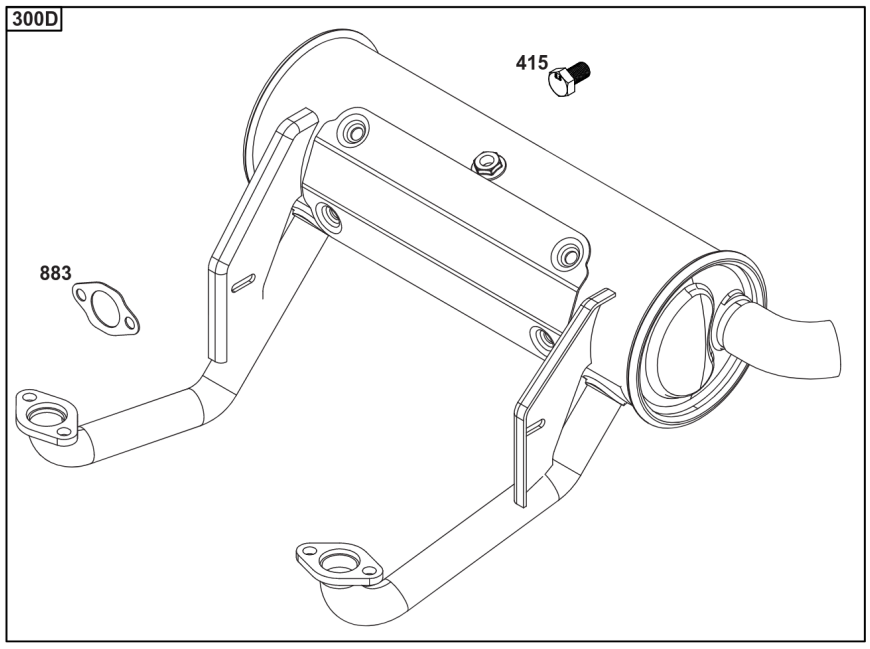

Not For Reproduction

Copyright © Briggs & Stratton. All Rights reserved

Engine Mounted Above Deck Mufflers

REF NO	PART NO	QTY	DESCRIPTION
300C	595138	1	MUFFLER -(Oil Filter Side Outlet) (Self-Supporting) (O2 Sensor Port)
300D	595139	1	MUFFLER -(Starter Side Outlet) (Self-Supporting) (O2 Sensor Port)
415	596859	1	PLUG -(O2 Sensor Port)
883	594365	2	GASKET, Exhaust

Not For Reproduction

Copyright © Briggs & Stratton. All Rights reserved

676

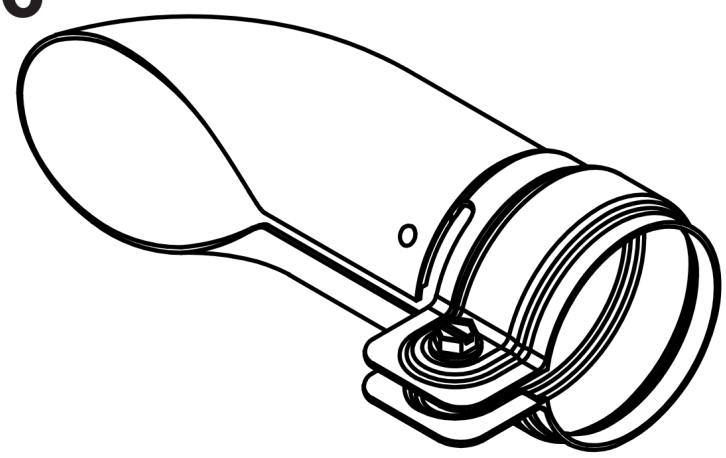

994

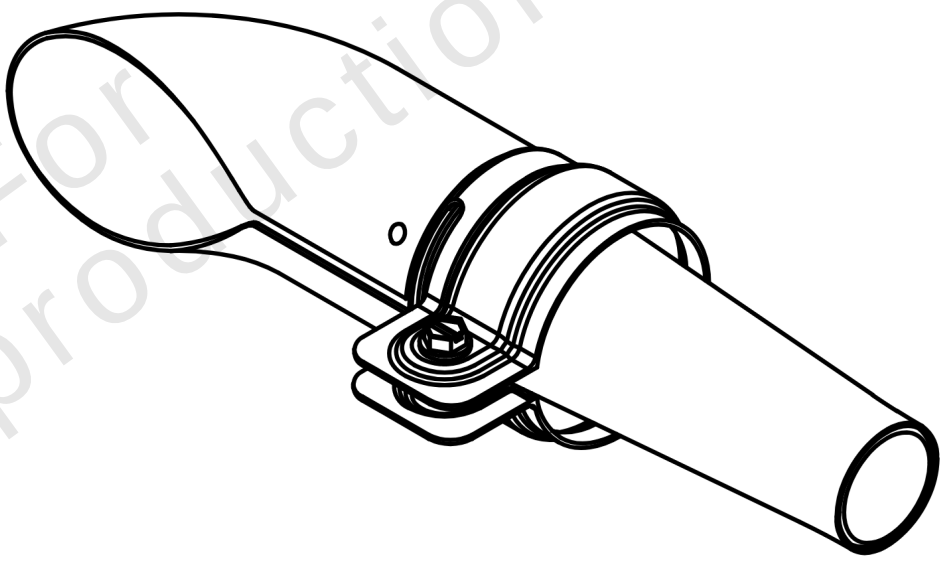

Not For Reproduction

994A

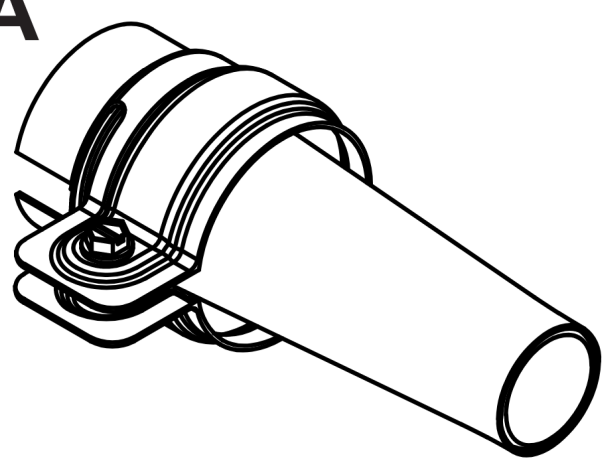

Copyright © Briggs & Stratton. All Rights reserved

Spark Arrester/Deflector

REF NO	PART NO	QTY	DESCRIPTION
676	593869	1	DEFLECTOR, Muffler -(For Below Deck Mufflers Only)
994	593885	1	ARRESTOR, Spark -(For Below Deck Mufflers Only)
994A	593868	1	ARRESTOR, Spark -(For Below Deck Mufflers Only)

Not For Reproduction

Copyright © Briggs & Stratton. All Rights reserved

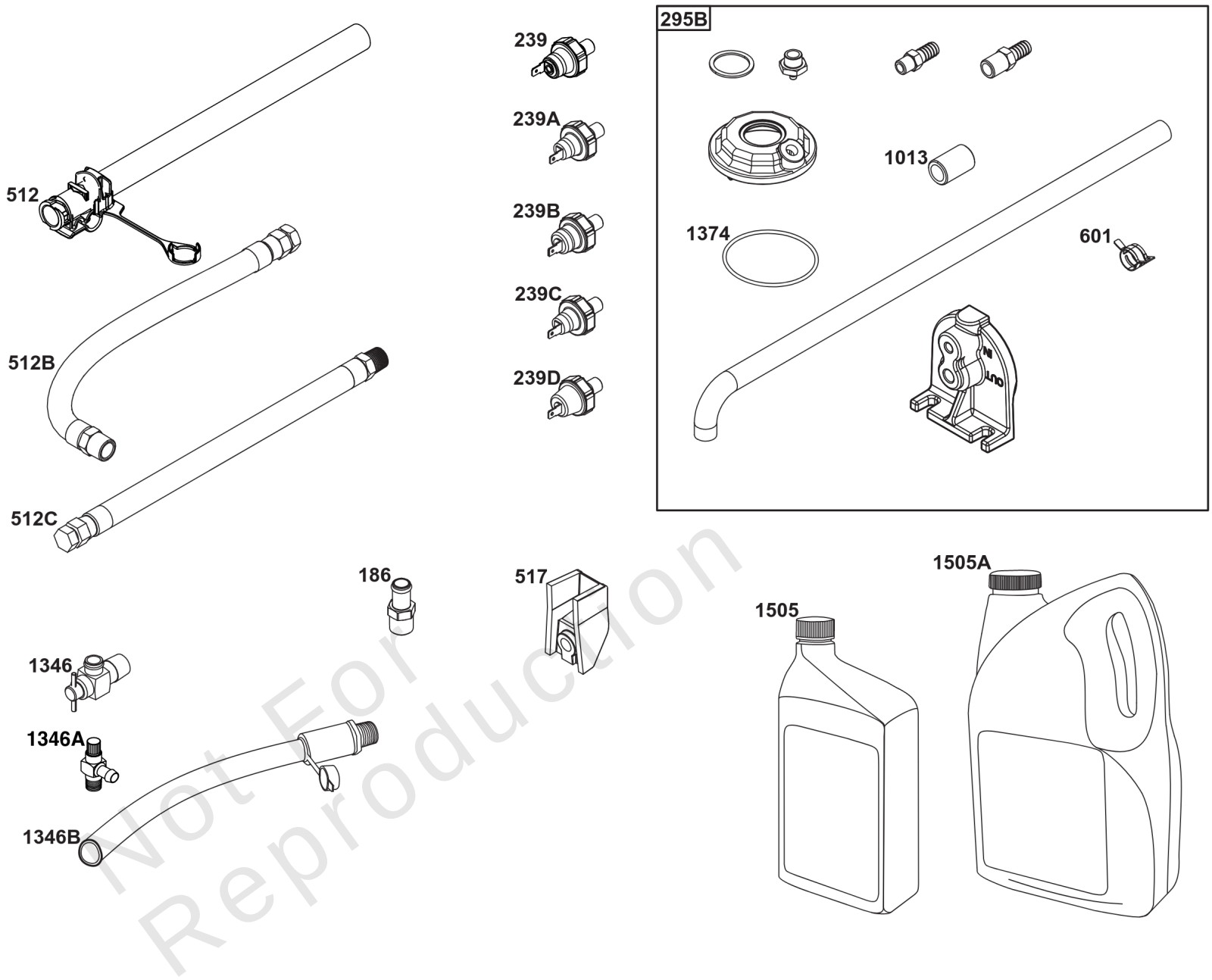

Not For Reproduction

Lubrication

REF NO	PART NO	QTY	DESCRIPTION
186	796532	1	CONNECTOR, Hose -(Threaded Engine Block Connector for EZ-Oil Drain Hose) (Order hose separate)
239	690233	1	SWITCH, Oil Pressure -(2-4 PSI Normally-Closed Switch)
239A	491657S	1	SWITCH, Oil Pressure -(3-5 PSI Normally-Closed Switch)
239B	841281	1	SWITCH, Oil Pressure -(7-10 PSI Normally-Closed Switch)
239C	694115	1	SWITCH, Oil Pressure -(9-13 PSI Normally-Closed Switch)
239D	697049	1	SWITCH, Oil Pressure -(3-6 PSI Normally-Open Switch)
295B	594271	1	ADAPTER, Remote Oil Filter -(Remote Oil Filter Kit)
512	594200	1	HOSE, Oil Drain -(EZ-Oil Drain Hose, 10.5") (Order threaded engine block connector separate)
512	593635	1	HOSE, Oil Drain -(EZ-Oil Drain Hose, 13.75") (Order threaded engine block connector separate)
512B	1723165SM	1	HOSE, Oil Drain, 10-1/2" Long, 3/8-18 Fittings -(10.5")
512C	5048681SM	1	HOSE, OIL DRAIN -(12.5")
517	593633	1	RETAINER, Oil Drain
601	841597	4	CLAMP, Hose
1013	690954	1	NIPPLE, Oil Filter
1346	844802	1	VALVE, Oil Drain Shut Off
1346A	492031	1	VALVE, Oil Drain Shut Off
1346B	5401WEB	1	VALVE, Oil Drain Shut Off -(1/4 Turn Oil Drain Valve with Hose)
1374	796863	1	SEAL, O-Ring
1505	100169		OIL-1QT VANGUARD (CASE) -(1 qt. Bottle)
1505A	100170		OIL-5QT VANGUARD (CASE) -(5 qt. Bottle)

Not For Reproduction

Copyright © Briggs & Stratton. All Rights reserved

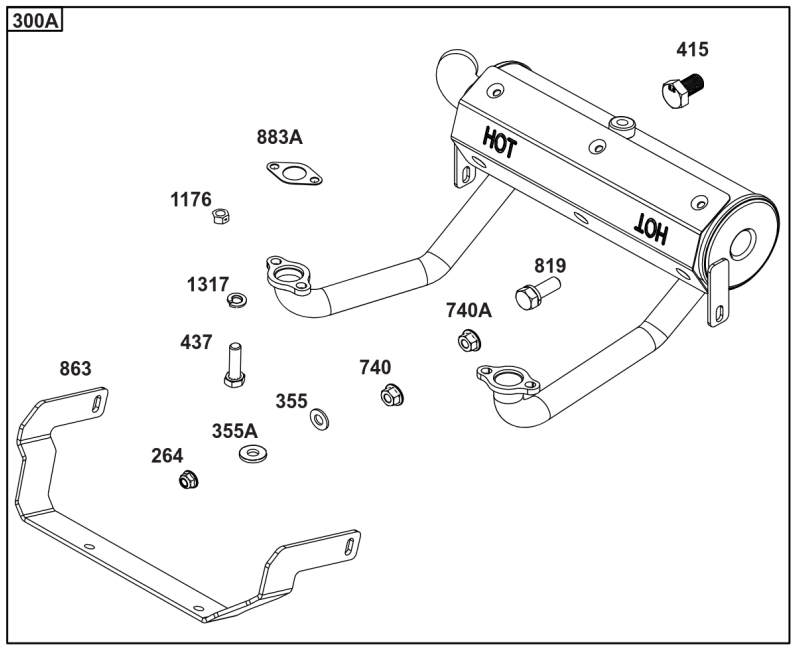

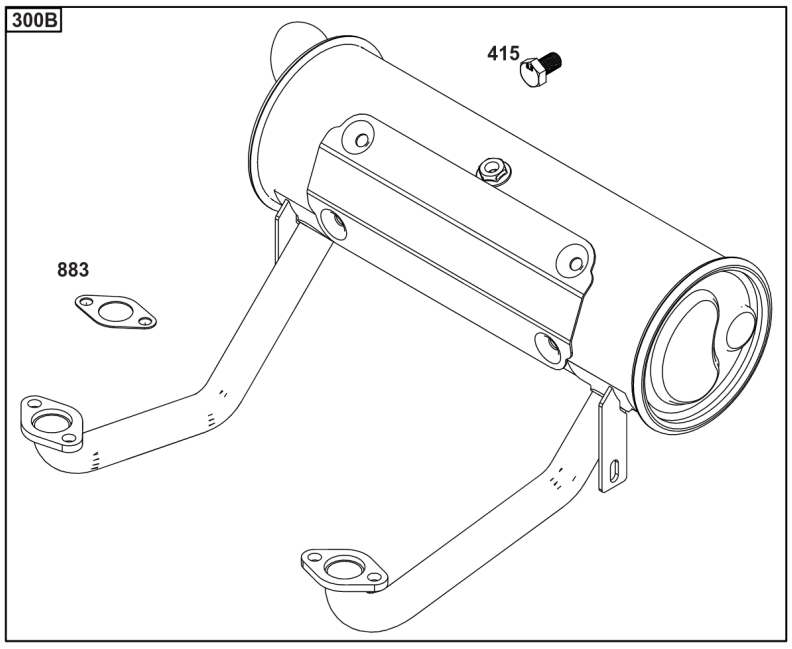

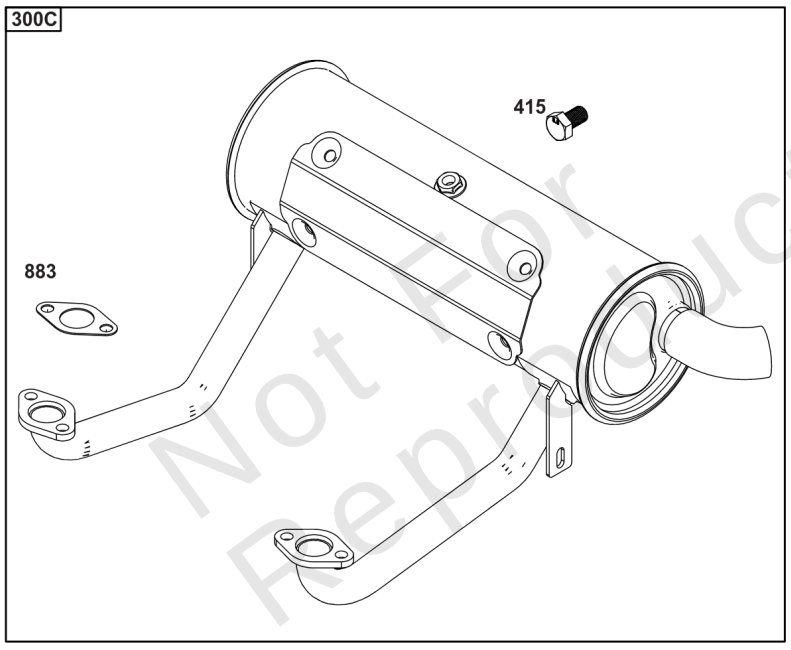

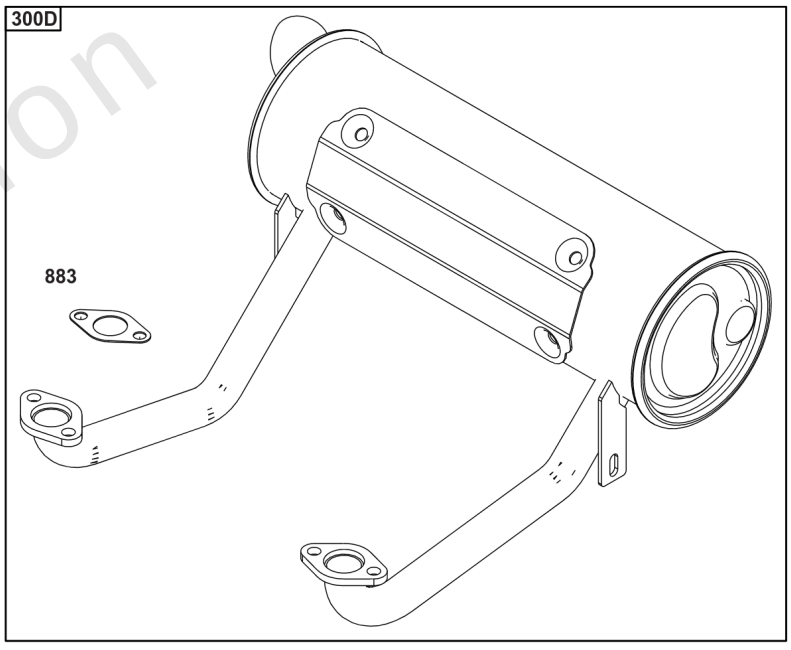

Not For Reproduction

Implement Mounted Above Deck Mufflers

REF NO	PART NO	QTY	DESCRIPTION
300A	594585	1	MUFFLER -(Oil Filter Side Outlet) (Implement Supported) (O2 Sensor Port)
300B	595134	1	MUFFLER -(Oil Filter Side Outlet) (O2 Sensor Port)
300C	595135	1	MUFFLER -(Starter Side Outlet) (O2 Sensor Port)
300D	595136	1	MUFFLER -(Oil Filter Side Outlet)
264	703465	4	NUT, 5/16-18, GR5 -(Muffler Adapter)
355	5025292SM	4	WASHER, 5/16" GD.9 FL -(Muffler Bracket)
355A	5025155SM	2	WASHER, 5/16 -(Muffler Bracket)
415	596859	1	PLUG -(O2 Sensor Port)
437	703585	4	CAPSCREW, 5/16-18X1 -(Exhaust Manifold)
740	703164	2	NUT -(Muffler Bracket)
740A	703115	2	NUT -(Muffler Bracket)
819	690341	4	SCREW -(Muffler Bracket)
863	597480	1	BRACKET, Muffler
883	594365	2	GASKET, Exhaust
883A	690970	2	GASKET, Exhaust
1176	690941	4	NUT -(Exhaust Manifold)
1317	703116	4	LCKWSHR -(Exhaust Manifold)

Not For Reproduction

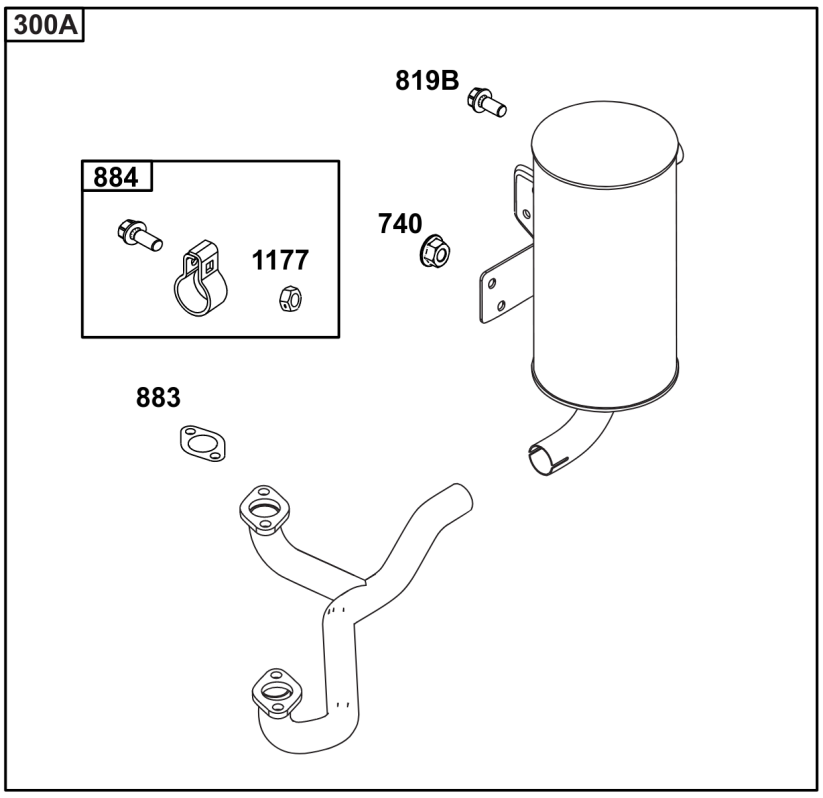

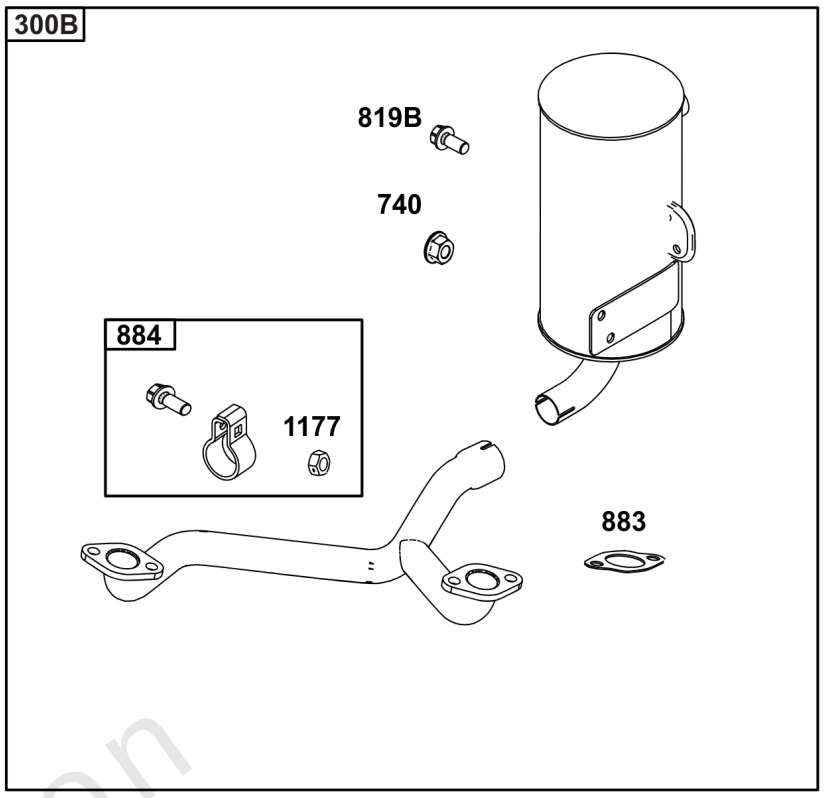

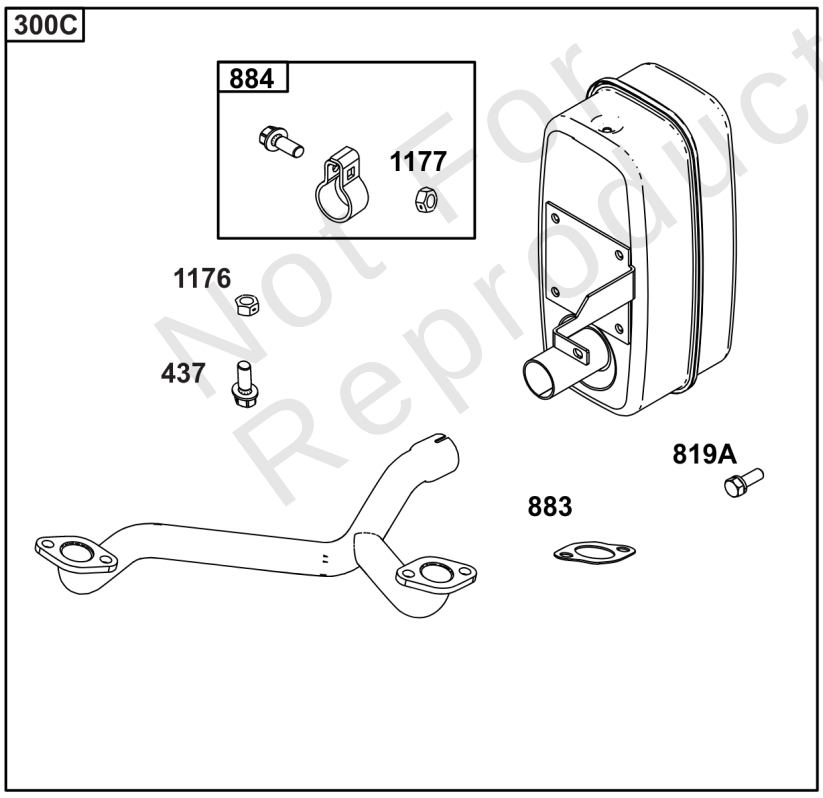

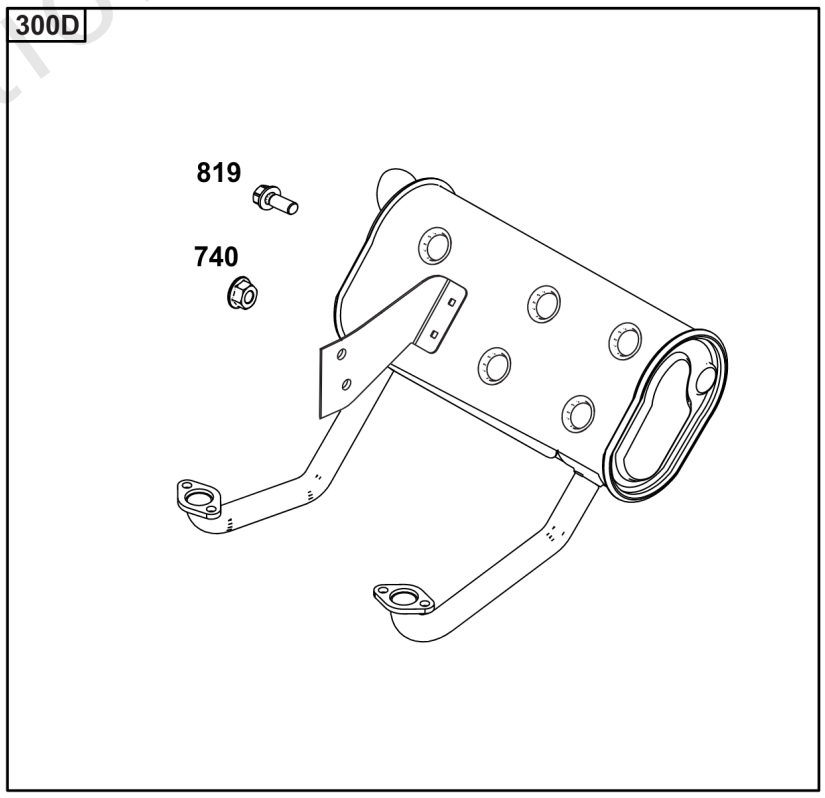

Not For Reproduction

Exhaust/Muffler Configurations

REF NO	PART NO	QTY	DESCRIPTION
300A	771127	1	MUFFLER -(Oil Filter Side Outlet)(Commercial & Professional Series)
300B	771128	1	MUFFLER -(Starter Side Outlet)(Commercial & Professional Series)
300C	595822	1	MUFFLER -(Starter Side Outlet)(Commercial & Professional Series)
300D	84003680	1	MUFFLER -(Oil Filter Side Outlet) (Commercial & Professional Series)(Vanguard 810 & 810 EFI) (Compatible with 593868 Spark Arrester, 593885 Spark Arrester with Deflector.) (Equipped with plug for blocking off O2 sensor port for non EFI engines.)
437	690341	4	SCREW -(Exhaust Manifold)
740	704067	2	NUT, HEX FLNG,5/16-18 -(Muffler Bracket)
819	592604	2	SCREW -(Muffler Bracket)
819A	695629	4	SCREW -(Muffler Bracket)
819B	692062	2	SCREW -(Muffler Bracket)
883	594365	2	GASKET, Exhaust
884	691956	1	CLAMP, Muffler
1176	690941	4	NUT -(Exhaust Manifold)
1177	793859	1	NUT -(Muffler)

Not For Reproduction

578A

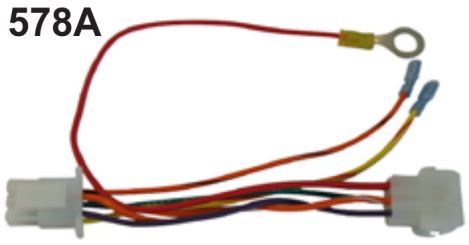

1616

920

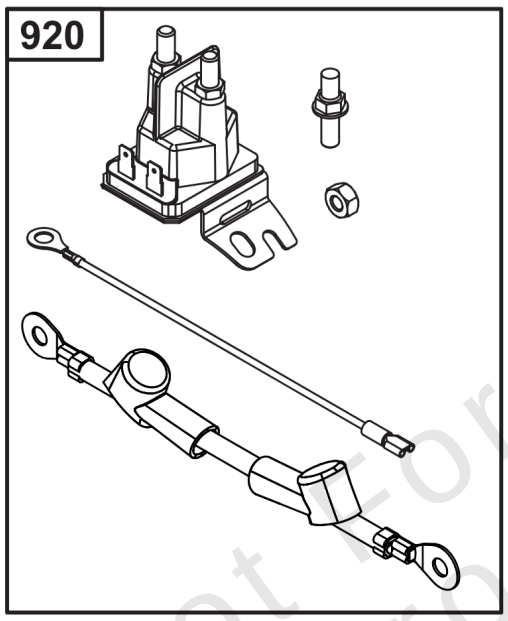

983

Not For Reproduction

853

578

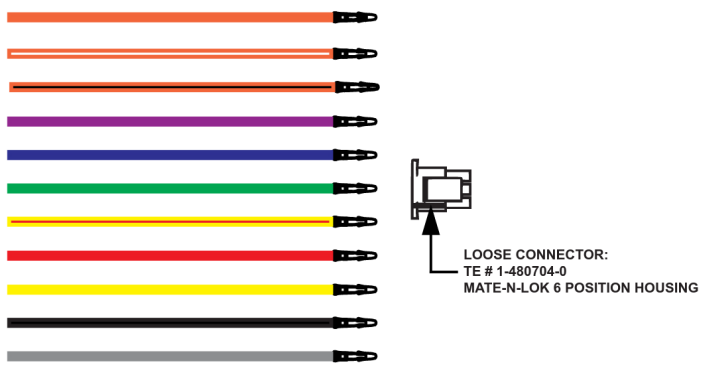

Copyright © Briggs & Stratton. All Rights reserved

Electrical

REF NO	PART NO	QTY	DESCRIPTION
578	84007350	1	WIRE ASSEMBLY -(Wire Harness Adapter Aids in repowering engine application with Male 6-Pin connector and wires create custom adapter configurations.)
578A	19631	1	TOOL, CUSTOM HARNESS -(6-pin Wire Harness Adapter) (Aids in repowering engine application to an EFI engine)
853	84003359	1	ADAPTER, WIRE -(Wire Harness Adapter) (Aids in repowering ExMark) (Flat 6-spade connector to Briggs & Stratton 6-Pin connector)
920	84002147	1	SOLENOID, STARTER -(Starter Solenoid Kit) (Aids in Repowering when original is solenoid shift)
983	5103809YP	1	LIGHT, Indicator -(MIL Light Indicator) (LED Red)
1616	19626	1	CODE READER -(Tiny Scan Code Reader)

Not For Reproduction

Copyright © Briggs & Stratton. All Rights reserved

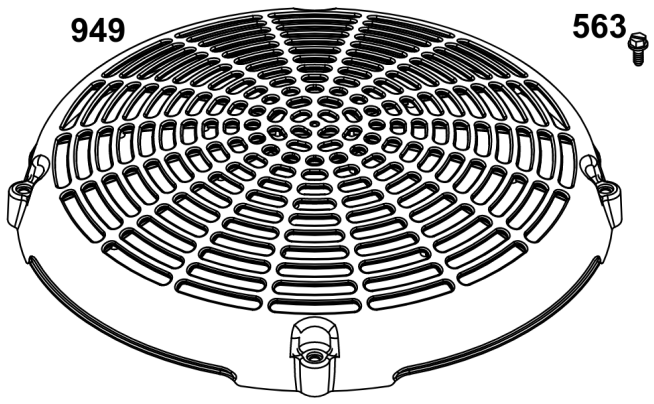

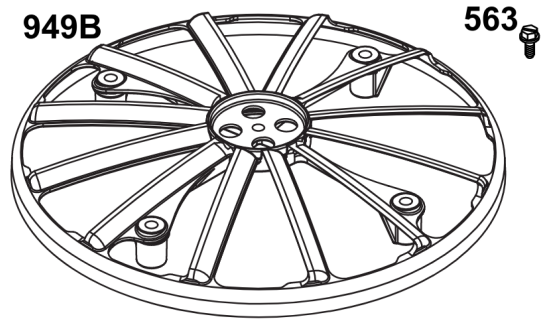

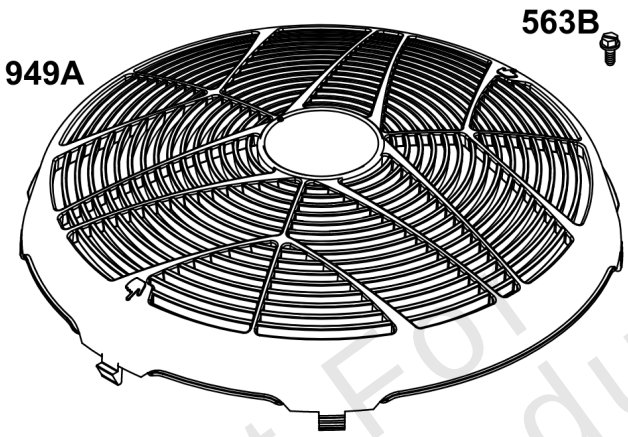

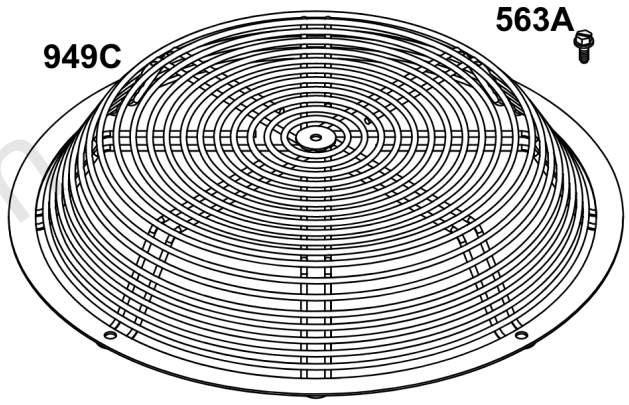

Not For Reproduction

Flywheel Guards

REF NO	PART NO	QTY	DESCRIPTION
563	799360	1	SCREW -(Debris Screen Guard)
563A	597574	1	SCREW -(Debris Screen Guard)
563B	799359	1	SCREW -(Debris Screen Guard)
949	799357	1	GUARD, Debris Screen -(Static Cover Flywheel) (Requires 4 x 799360 Screw)
949A	797420YP	1	GUARD, Debris Screen -(Static Cover Flywheel High Flow) (Requires 4 x 799360 Screw)
949B	593206	1	GUARD, Debris Screen -(Static Cover Flywheel) (Requires 4 x 799359 Screw)
949C	597573	1	GUARD, Debris Screen -(Wire Static Flywheel Cover) (Requires 4x 597574 Screw) (For Commercial Series)

Not For Reproduction

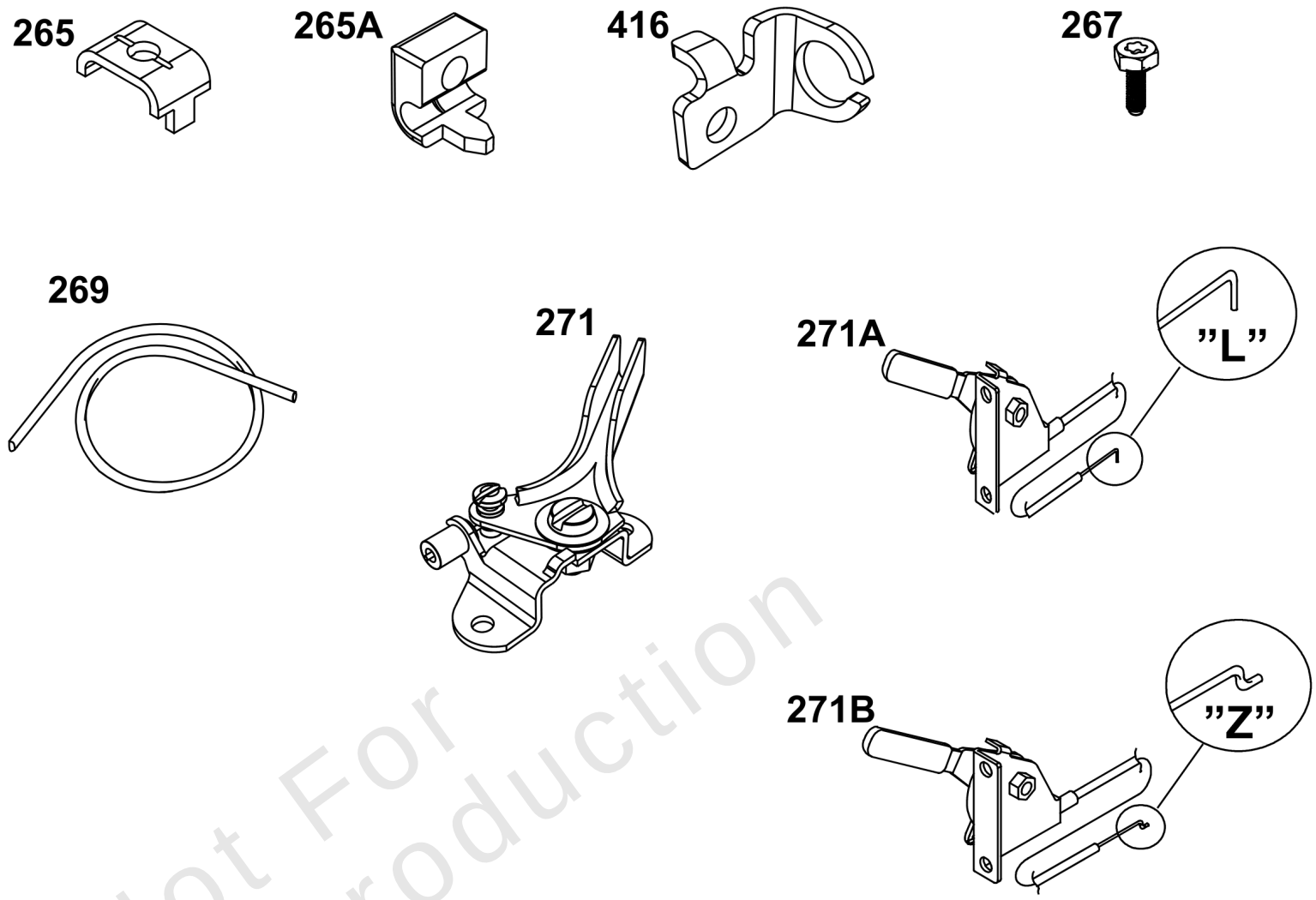

Not For Reproduction

Speed Control

REF NO	PART NO	QTY	DESCRIPTION
265	691024	1	CLAMP, Casing -(Casing Clamp for Hard Casing)
265A	690798	1	CLAMP, Casing -(Casing Clamp for Soft Casing)
267	792629	1	SCREW -(Screw for Casing Clamp)
269	93907	1	WIRE, Control -(Control Wire 100')
271	691028	1	LEVER, Control -(Speed Control Lever Assembly)
271A	692105	1	LEVER, Control -(“L” formed end Speed Control Lever Assembly)
271B	692541	1	LEVER, Control -(“Z” formed end Speed Control Lever Assembly)
416	595196	1	BRACKET, Throttle Cable -(Casing Clamp for Snap-In Casing)

Not For Reproduction

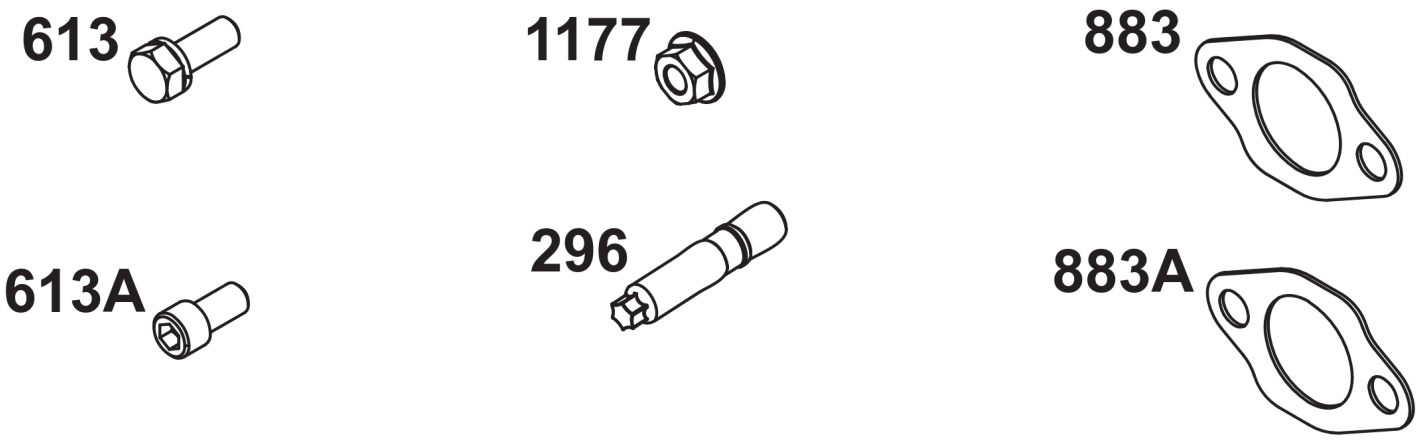

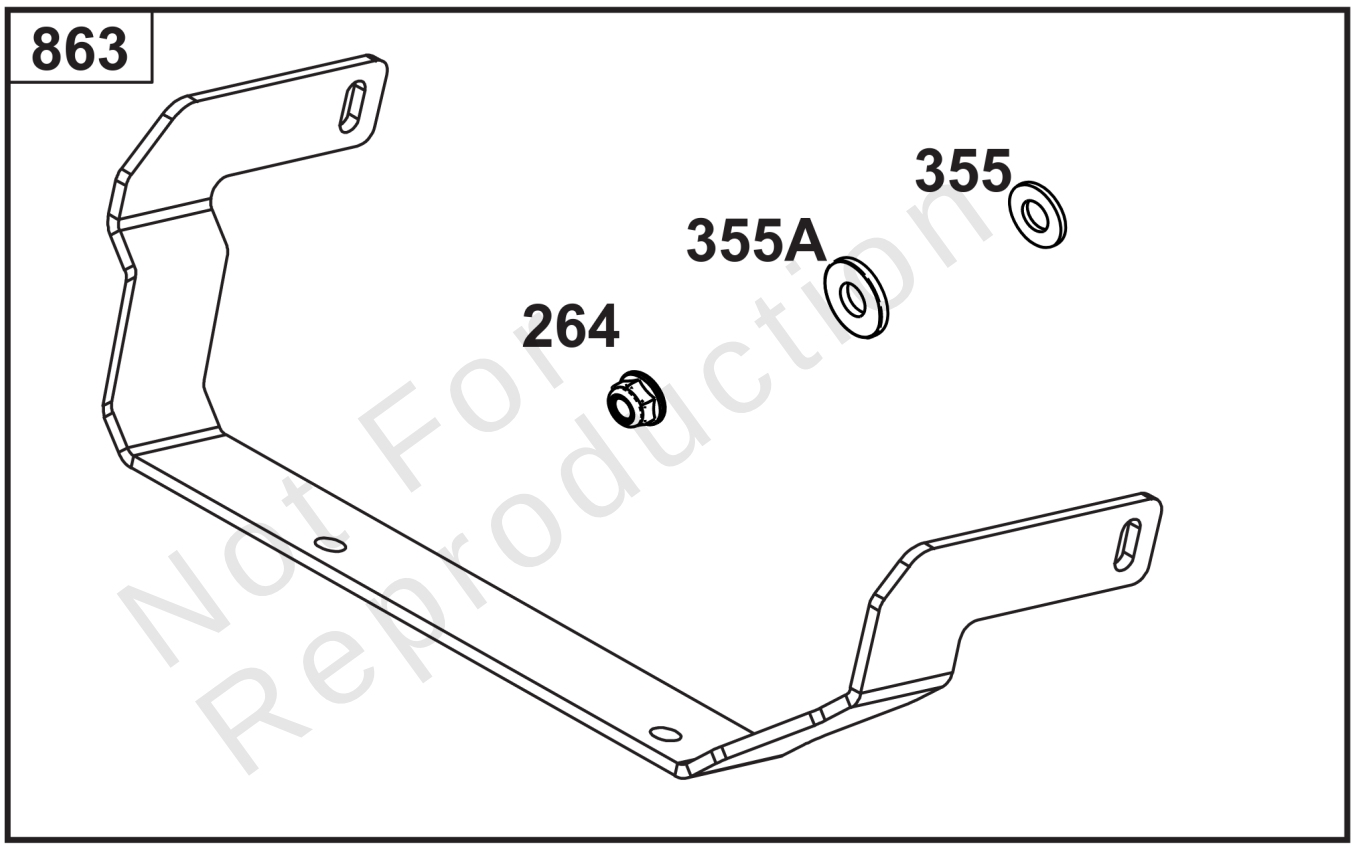

Not For Reproduction

Muffler Mounting Hardware

REF NO	PART NO	QTY	DESCRIPTION
264	703465	4	NUT, 5/16-18, GR5 -(Muffler Adapter)
296	591756	4	STUD -(Muffler)
355	5025292SM	4	WASHER, 5/16" GD.9 FL -(Muffler Bracket)
355A	5025155SM	2	WASHER, 5/16 -(Muffler Bracket)
613	690341	4	SCREW -(Muffler)
613A	690363	4	SCREW -(Muffler)
863	597480	1	BRACKET, Muffler
883	594365	2	GASKET, Exhaust
883A	690970	2	GASKET, Exhaust
1177	690941	4	NUT -(Muffler)

Not For Reproduction

Copyright © Briggs & Stratton. All Rights reserved