Parts Manual

Mfg. No: 44T677-0003-G1

Copyright © Briggs & Stratton. All Rights reserved

Model Components — Page

Blower Housing, Air Cleaner. . . . 4
Carburetor, Fuel Filter. . . . 6
Cylinder Head, Rocker Arm Cover, Intake Manifold. . . . 10
Cylinder, Crankshaft, Camshaft, Air Guides. . . . 12
Engine Gasket Set, Valve Gasket Set. . . . 16
Engine Sump, Oil Cooler, Dipstick/Tube Assembly. . . . 18
Flywheel, Alternator, Starter, Wire Harness. . . . 22
Replacement Engine - US & Canada. . . . 24
Model 40, 44 & 49 Engine Accessories Catalog. . . . 25
- Maintenance Kits. . . . 26
- Engine Mounted Below Deck Mufflers. . . . 28
- Engine Mounted Above Deck Mufflers. . . . 30
- Spark Arrester/Deflector. . . . 32
- Lubrication. . . . 34
- Implement Mounted Above Deck Mufflers. . . . 36
- Exhaust/Muffler Configurations. . . . 38
- Electrical. . . . 40
- Flywheel Guards. . . . 42
- Speed Control. . . . 44
- Muffler Mounting Hardware. . . . 46

Not For Reproduction

Copyright © Briggs & Stratton. All Rights reserved

Blower Housing, Air Cleaner

Mfg. No: 44T677-0003-G1

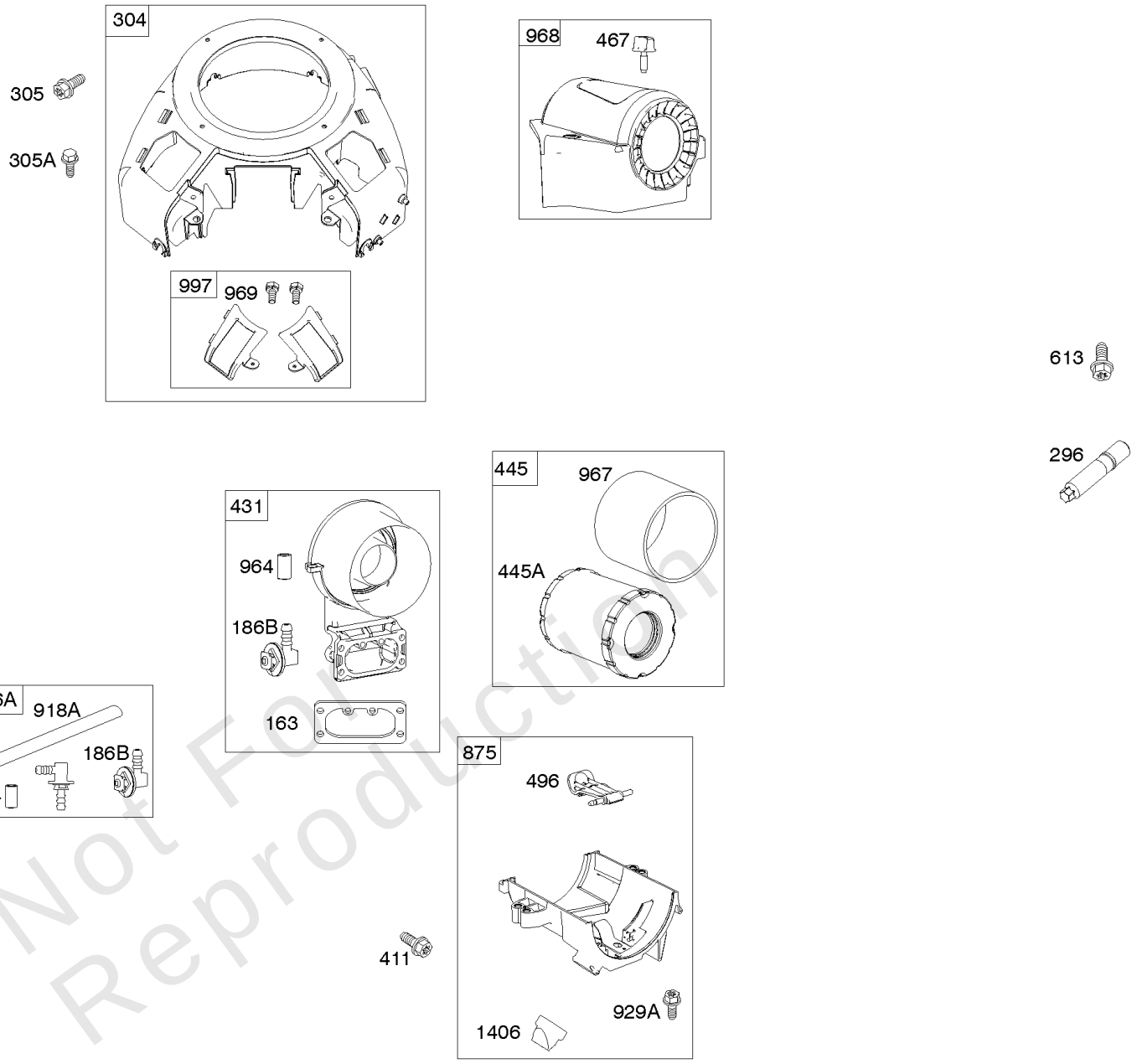

Not For Reproduction

Copyright © Briggs & Stratton. All Rights reserved

Blower Housing, Air Cleaner

REF NO	PART NO	QTY	DESCRIPTION
163	691001		GASKET, Air Cleaner
186A	799158		CONNECTOR, Hose -(EVAP)
186B	845141		CONNECTOR, Hose -(EVAP)
296	591756		STUD -(Muffler)
304	799957		HOUSING, Blower
305	594618		SCREW -(Blower Housing)
305A	557049		SCREW -(Blower Housing) (Blower Housing To Intake Elbow)
411	698304		SCREW -(Air Cleaner Base to Air Cleaner Bracket)
431	799097		ELBOW, Intake
445	595536		FILTER, A/C Cartridge
445A	798897		FILTER, A/C Cartridge
467	790697		KNOB, Air Cleaner Cover
496	799095		LEVER, Air Cleaner Filter
613	690341		SCREW -(Muffler)
875	799094		BASE, Air Cleaner
918A	799160		HOSE, Vacuum -(Length 9.4 Inches)
929A	691003		SCREW -(Choke Control Bracket)
964	799159		CAP, Connector
967	593217		FILTER, Pre Cleaner
968	799102		COVER, Air Cleaner
969	799093		SCREW -(Blower Housing Cover)
997	592782		COVER, Blower Housing
1406	799096		VALVE, Debris

Not For Reproduction

Copyright © Briggs & Stratton. All Rights reserved

Carburetor, Fuel Filter

Mfg. No: 44T677-0003-G1

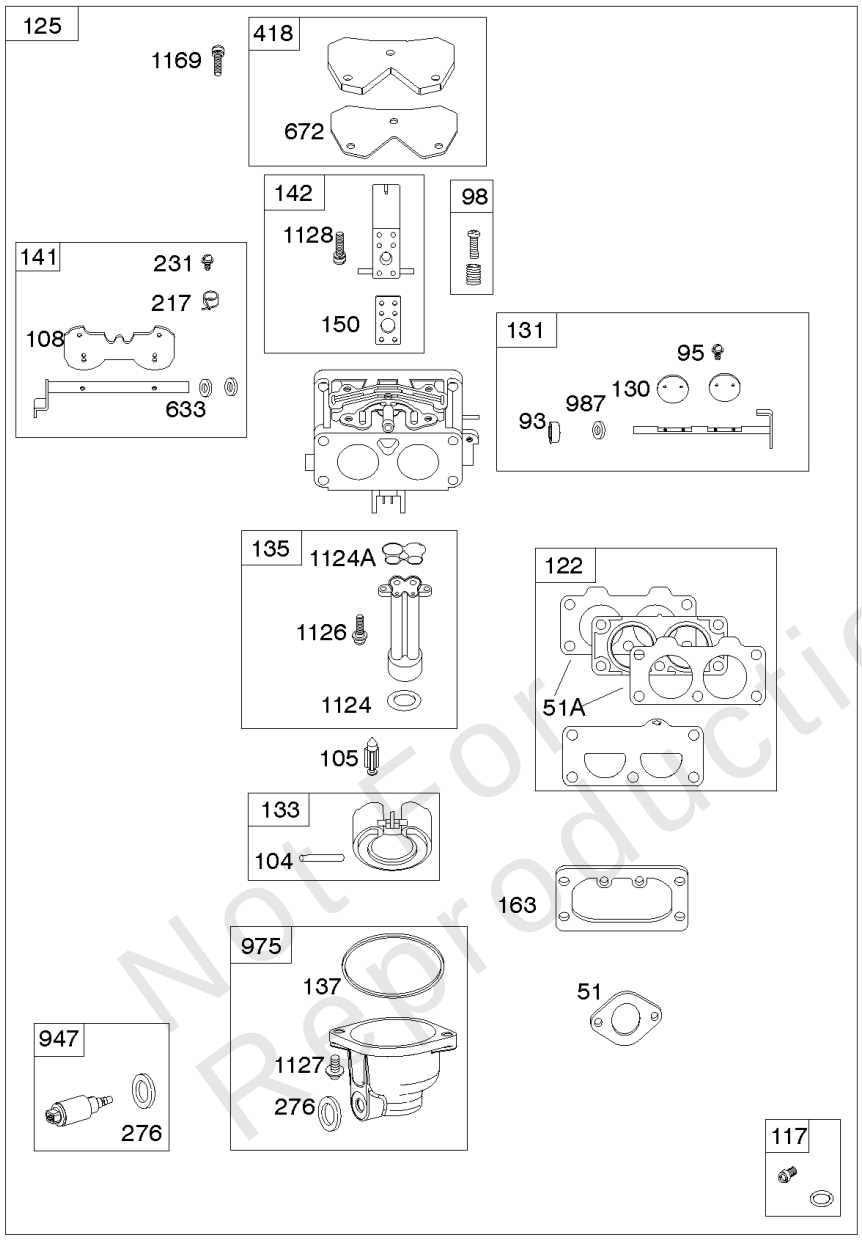

Not For Reproduction

Copyright © Briggs & Stratton. All Rights reserved

Carburetor, Fuel Filter

REF NO	PART NO	QTY	DESCRIPTION
51	690949		GASKET, Intake
51A	594427		GASKET, Intake
93	845864		BUSHING, Throttle Shaft
95	690718		SCREW -(Throttle Valve)
98	699721		KIT, Idle Speed
104	694918		PIN, Float Hinge
105	797410		VALVE, Float Needle
108	699723		VALVE, Choke
117	842081		JET, Main -(Standard) (Left and Right Jet)
118	699733		JET, Main -(High Altitude) (Left and Right Jet)
122	593425		SPACER, Carburetor
125	799109		CARBURETOR
130	690993		VALVE, Throttle
131	799113		KIT, Throttle Shaft
133	699724		FLOAT, Carburetor
135	699729		TUBE, Fuel Transfer
137	690994		GASKET, Float Bowl
141	799112		KIT, Choke Shaft
142	796871		NOZZLE, Carburetor
150	841649		GASKET, Nozzle
163	691001		GASKET, Air Cleaner
186A	799158		CONNECTOR, Hose -(EVAP)
186B	845141		CONNECTOR, Hose -(EVAP)
187	791766		LINE, Fuel -(Cut To Required Length)
217	799771		SPRING, Choke Return
231	690718		SCREW -(Choke Valve)
240	695666		FILTER, Fuel
276	695410		WASHER, Sealing
385	797409		SCREW -(Fuel Pump)
387	808656		PUMP, Fuel
418	795912		PLATE, Carburetor Cover
601	691038		CLAMP, Hose -(Black)
633	690722		SEAL, Choke/Throttle Shaft
672	690234		GASKET, Carburetor Plate
918A	799160		HOSE, Vacuum -(Length 9.4 Inches)
947	798779		SOLENOID, Fuel
964	799159		CAP, Connector
975	799114		BOWL, Float
987	808183		SEAL, Choke/Throttle Shaft
1124	841653		SEAL, O-Ring -(Fuel Transfer Tube)
1124A	690988		SEAL, O-Ring -(Fuel Transfer Tube)
1126	690991		SCREW -(Fuel Transfer Tube)

Not For Reproduction

Copyright © Briggs & Stratton. All Rights reserved

Carburetor, Fuel Filter

Mfg. No: 44T677-0003-G1

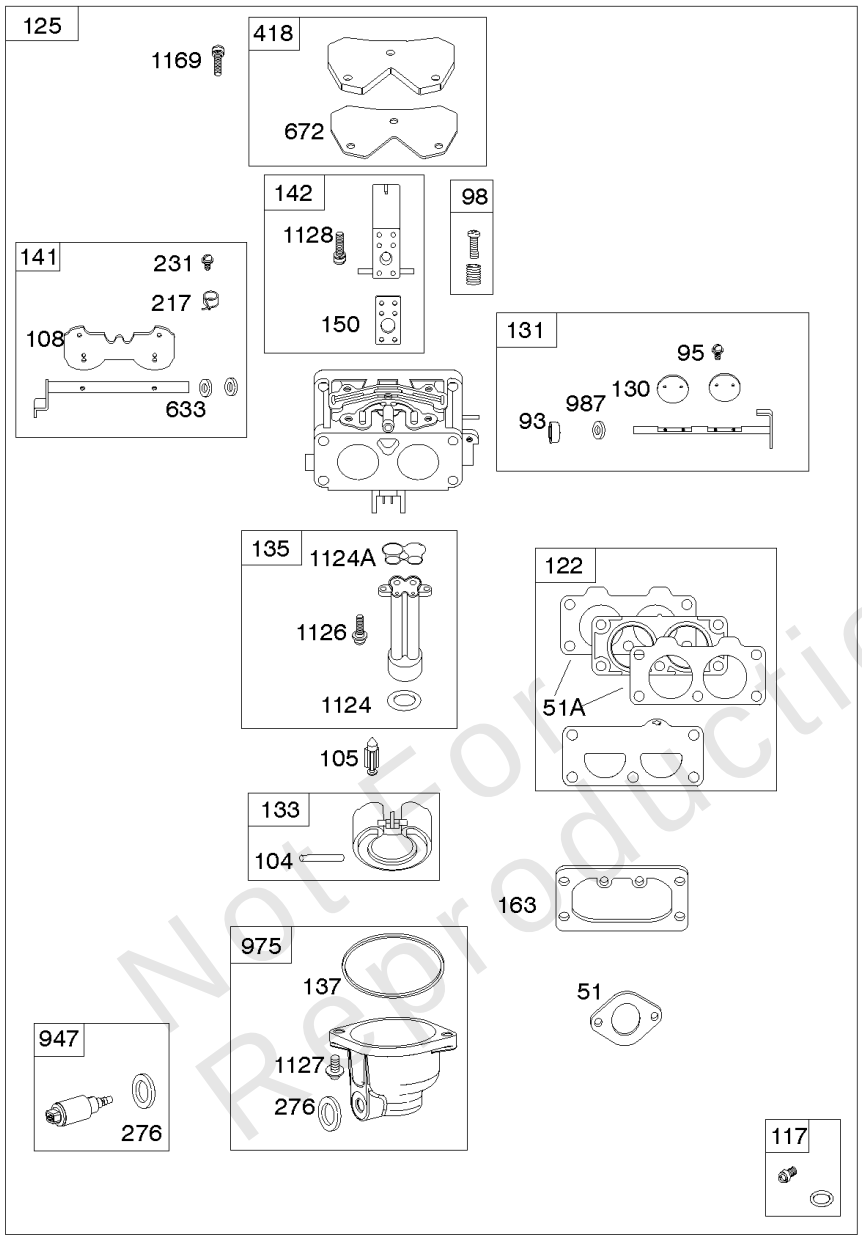

Not for Reproduction

Copyright © Briggs & Stratton. All Rights reserved

Carburetor, Fuel Filter

REF NO	PART NO	QTY	DESCRIPTION
1127	695407		SCREW -(Float Bowl) (Float Bowl to Carburetor Body)
1128	690990		SCREW -(Carburetor Nozzle)
1169	690990		SCREW -(Carburetor Cover Plate)

Not For Reproduction

Copyright © Briggs & Stratton. All Rights reserved

Cylinder Head, Rocker Arm Cover, Intake Manifold

Mfg. No: 44T677-0003-G1

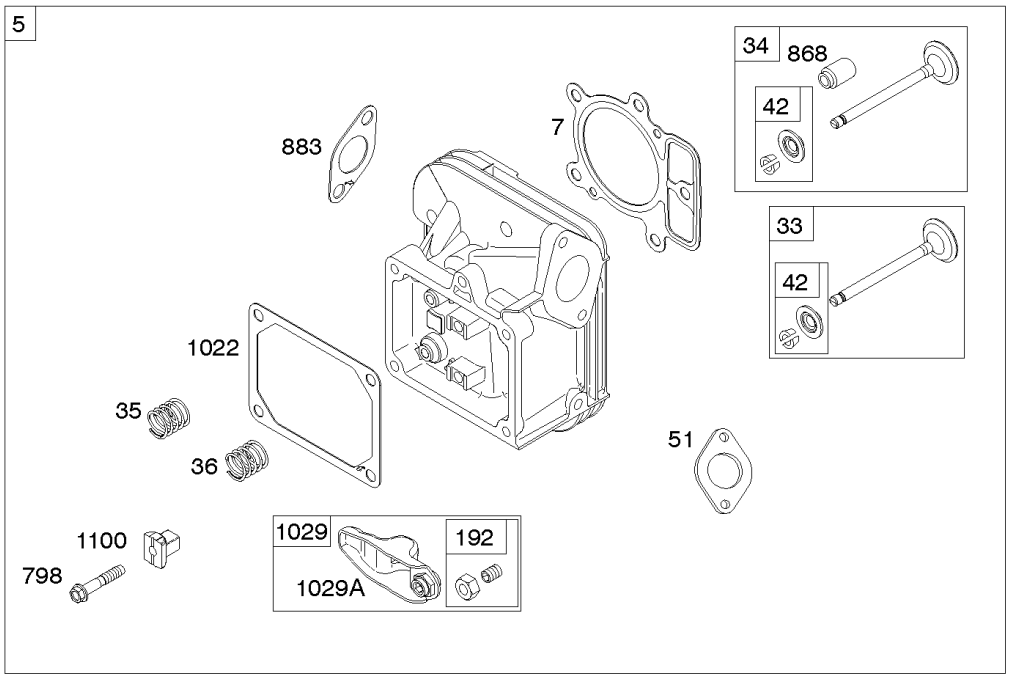

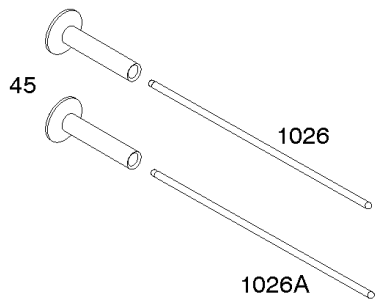

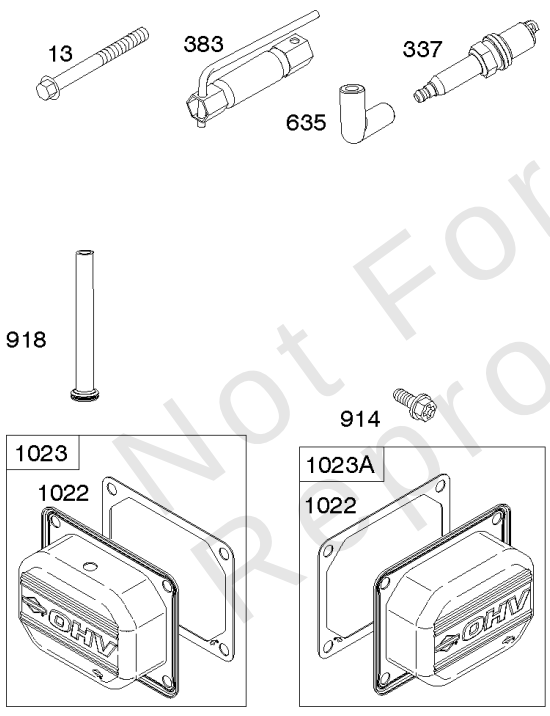

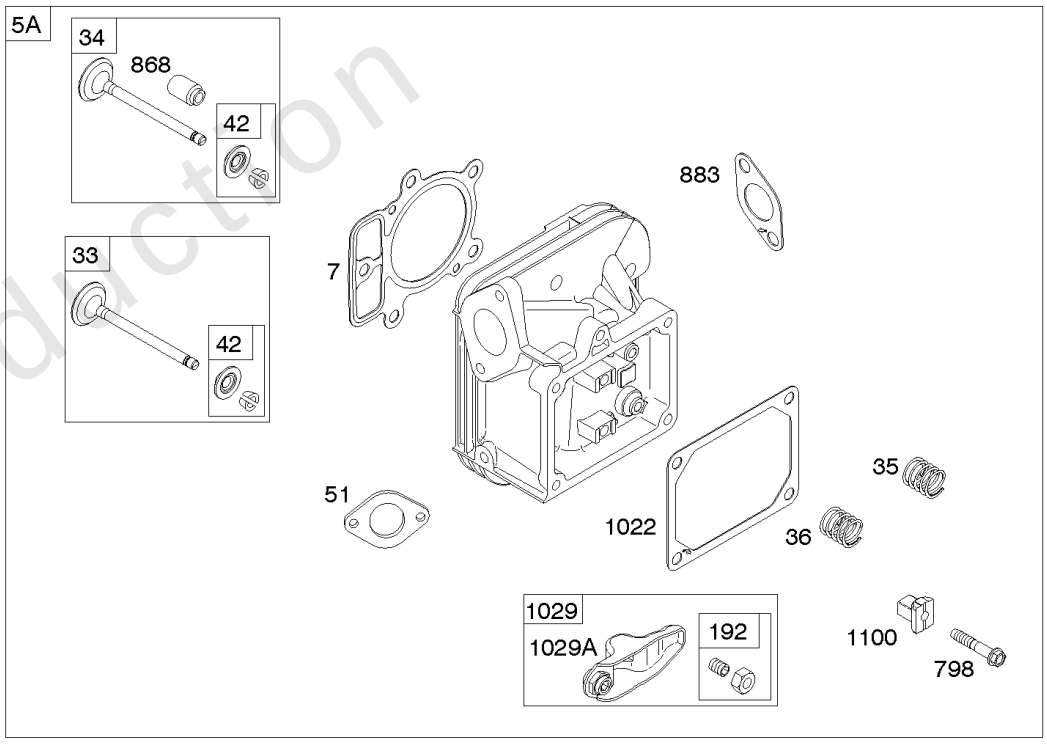

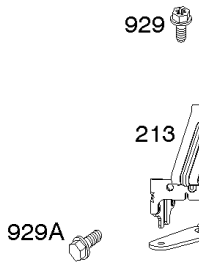

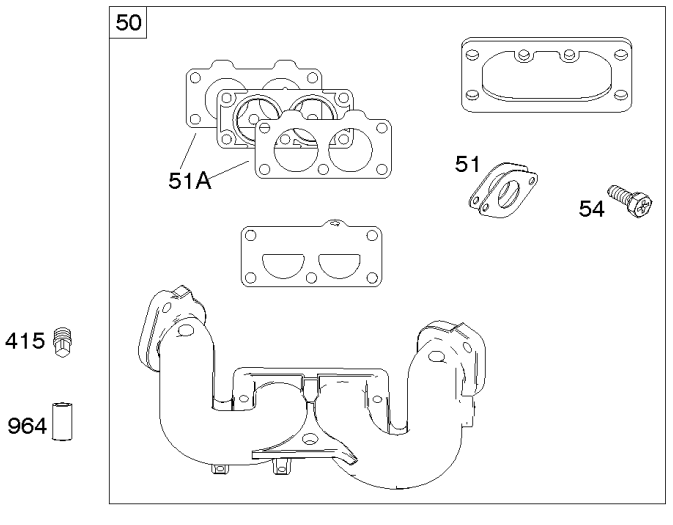

Not For Reproduction

Cylinder Head, Rocker Arm Cover, Intake Manifold

REF NO	PART NO	QTY	DESCRIPTION
5	796231		HEAD, Cylinder -(Cylinder #1)
5A	796232		HEAD, Cylinder -(Cylinder #2)
7	693997		GASKET, Cylinder Head
13	592244		SCREW -(Cylinder Head)
33	697576		VALVE, Exhaust
34	792200		VALVE, Intake
35	694865		SPRING, Valve -(Intake)
36	694865		SPRING, Valve -(Exhaust)
42	499586		KEEPER, Valve
45	690977		TAPPET, Valve
50	798752		MANIFOLD, Intake
51	690949		GASKET, Intake
51A	594427		GASKET, Intake
53	690951		STUD -(Carburetor)
54	699816		SCREW -(Intake Manifold)
192	690083		ADJUSTER. Rocker Arm
213	799510		BRACKET, Choke Control
337	792015		PLUG, Spark
383	19576S		WRENCH, Spark Plug
415	794903		PLUG
635	692076		BOOT, Spark Plug
654	690958		NUT -(Carburetor)
798	697890		SCREW -(Rocker Arm)
868	690968		SEAL, Valve
883	690970		GASKET, Exhaust
914	691127		SCREW -(Rocker Cover)
918	593998		HOSE, Vacuum -(Length 3.2 Inches)
929	794904		SCREW -(Choke Control Bracket)
929A	691003		SCREW -(Choke Control Bracket)
964	799159		CAP, Connector
1022	690971		GASKET, Rocker Cover
1023	793146		COVER, Rocker -(Cylinder #1)
1023A	499600		COVER, Rocker -(Cylinder #2)
1026	690981		ROD, Push -(Steel)
1026A	690982		ROD, Push -(Aluminum)
1029	690972		ARM, Rocker
1029A	807323		ARM, Rocker
1100	791959		PIVOT, Rocker Arm

Not For Reproduction

Copyright © Briggs & Stratton. All Rights reserved

Cylinder, Crankshaft, Camshaft, Air Guides

Mfg. No: 44T677-0003-G1

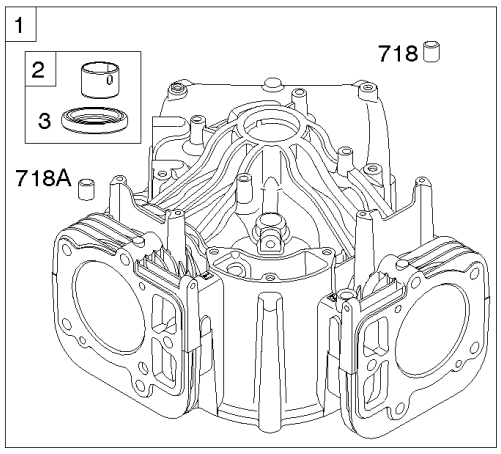

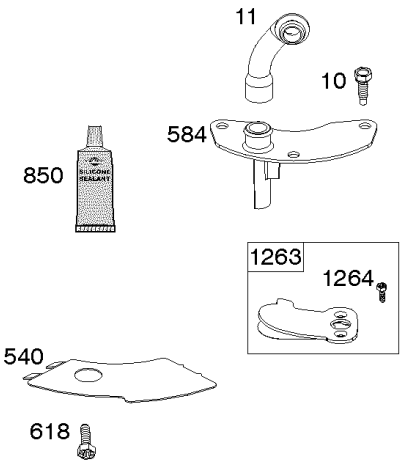

1319 WARNING LABEL

REQUIRED *when replacing parts with warning labels affixed.*

1319A WARNING LABEL

REQUIRED *when replacing parts with warning labels affixed.*

1330 REPAIR MANUAL

1036 EMISSIONS LABEL

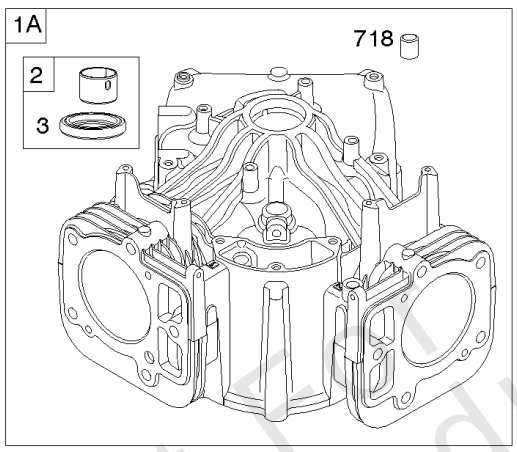

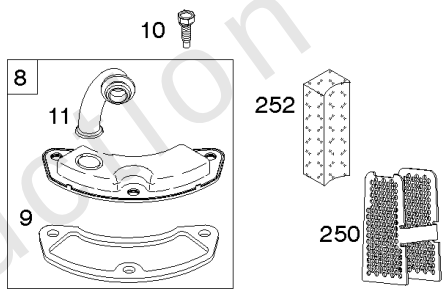

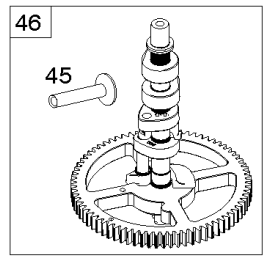

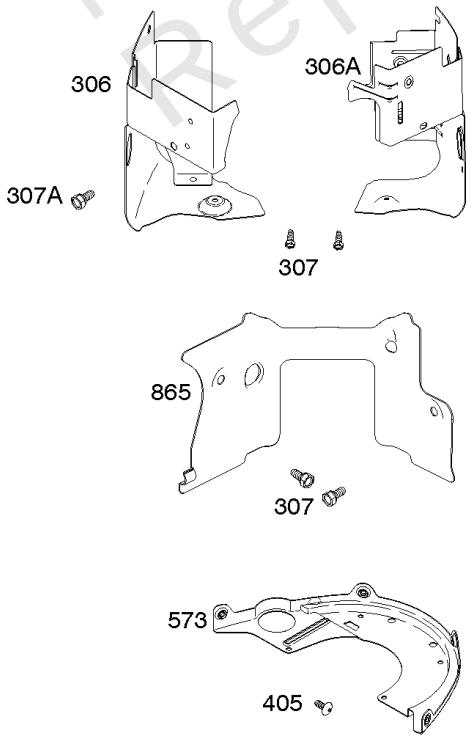

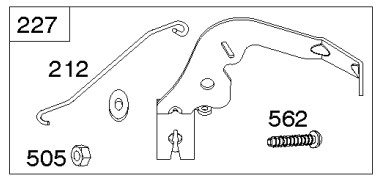

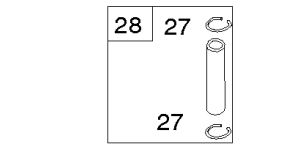

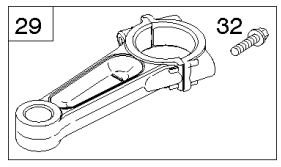

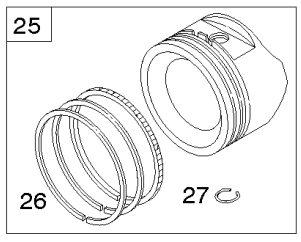

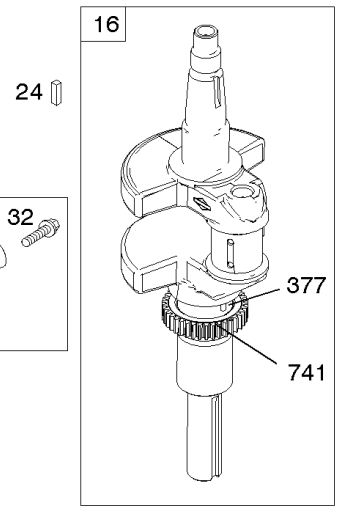

Not for reproduction

Cylinder, Crankshaft, Camshaft, Air Guides

REF NO	PART NO	QTY	DESCRIPTION
1	594970		CYLINDER ASSEMBLY -Used After Code Date 15071500
1A	594162		CYLINDER ASSEMBLY -Used Before Code Date 15071600
2	797673		KIT, Bushing/Seal -(Magneto Side)
3	391086S		SEAL, Oil -(Magneto Side)
8	792185		BREATHER ASSEMBLY -Used Before Code Date 14110500
9	690937		GASKET, Breather -Used Before Code Date 14110500
10	691108		SCREW -(Breather Assembly)
11	792184		TUBE-BREATHER -Used Before Code Date 14110500
11	594163		TUBE, Breather -Used After Code Date 14110400
16	796237		CRANKSHAFT
24	222698S		KEY, Flywheel
25	792023		PISTON ASSEMBLY -(Standard)
25	792072		PISTON ASSEMBLY -(.020" Oversize)
26	792026		SET, Ring -(Standard)
26	792073		SET, Ring -(.020" Oversize)
27	690975		LOCK, Piston Pin
28	696581		PIN, Piston -(Standard)
29	796209		ROD, Connecting
32	690976		SCREW -(Connecting Rod)
45	690977		TAPPET, Valve
46	797242		CAMSHAFT
212	695238		LINK, Throttle
227	798856		LEVER, Governor Control
250	690957		RETAINER, Breather -Used Before Code Date 14110500
252	794389		COLLECTOR-OIL -Used Before Code Date 14110500
306	796852		SHIELD-CYLINDER -(Cylinder #1)
306A	591666		SHIELD-CYLINDER -(Cylinder #2)
307	691003		SCREW -(Cylinder Shield)
307A	691108		SCREW -(Cylinder Shield)
377	690979		KEY, Woodruff
405	594937		SCREW -(Back Plate)
505	691029		NUT -(Governor Control Lever)
540	594325		PLATE, Baffle
562	690311		BOLT -(Governor Control Lever)

Not For Reproduction

Copyright © Briggs & Stratton. All Rights reserved

Cylinder, Crankshaft, Camshaft, Air Guides

Mfg. No: 44T677-0003-G1

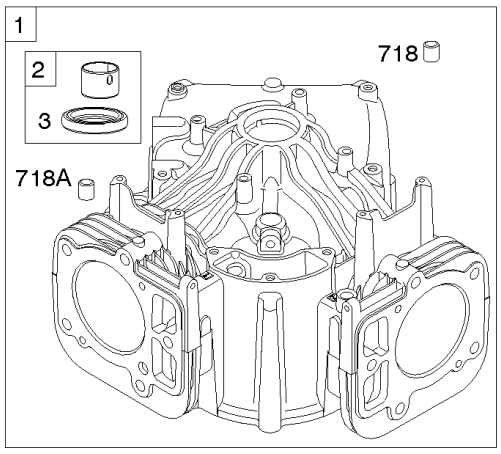

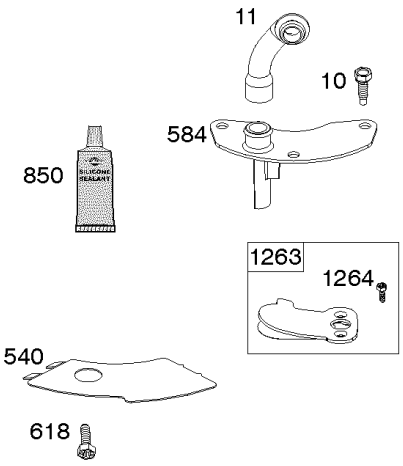

1319 WARNING LABEL

REQUIRED *when replacing parts with warning labels affixed.*

1319A WARNING LABEL

REQUIRED *when replacing parts with warning labels affixed.*

1330 REPAIR MANUAL

1036 EMISSIONS LABEL

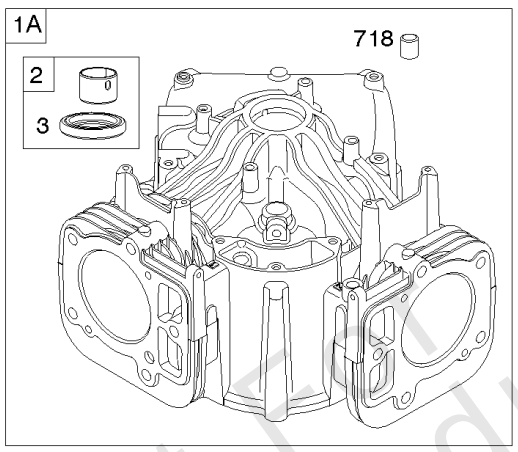

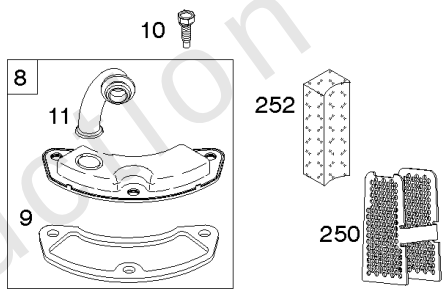

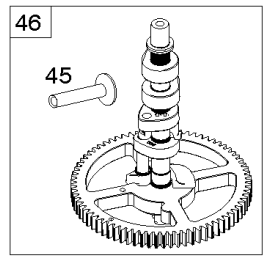

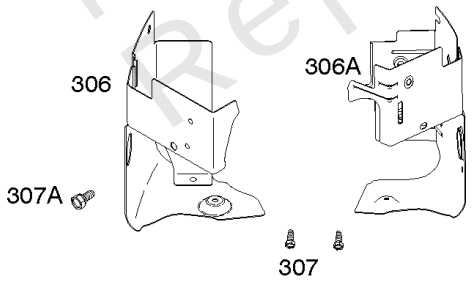

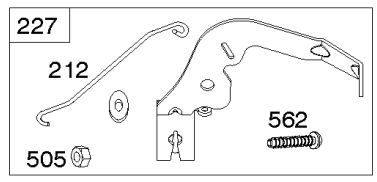

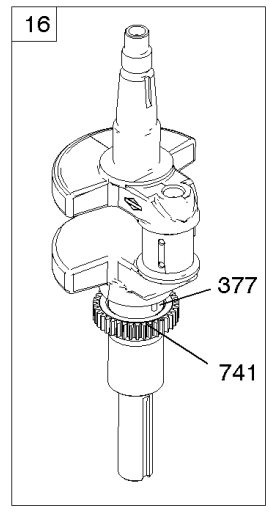

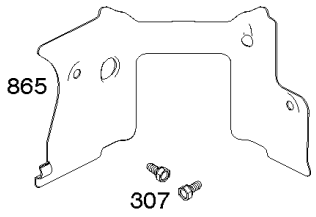

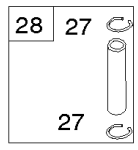

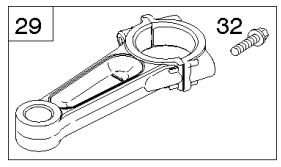

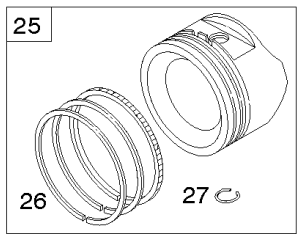

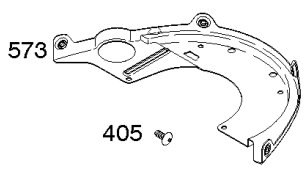

Not for reproduction

Cylinder, Crankshaft, Camshaft, Air Guides

REF NO	PART NO	QTY	DESCRIPTION
573	594902		PLATE, Back
584	594164		COVER, Breather Passage
618	594326		SCREW -(Baffle Plate)
718	690959		PIN, Locating
718A	594988		PIN, Locating
741	690980		GEAR, Timing
850	100106		SEALANT, Liquid
865	591667		COVER, Air Guide -(Valley)
1036	-----		Label-Emissions
1263	594166		REED, Breather
1264	594165		SCREW -(Breather Reed)
1319	794467		LABEL, Warning
1319A	797669		LABEL, Warning
1330	273521		MANUAL, Repair

Not For Reproduction

Copyright © Briggs & Stratton. All Rights reserved

Engine Gasket Set, Valve Gasket Set

Mfg. No: 44T677-0003-G1

121 CARBURETOR OVERHAUL KIT

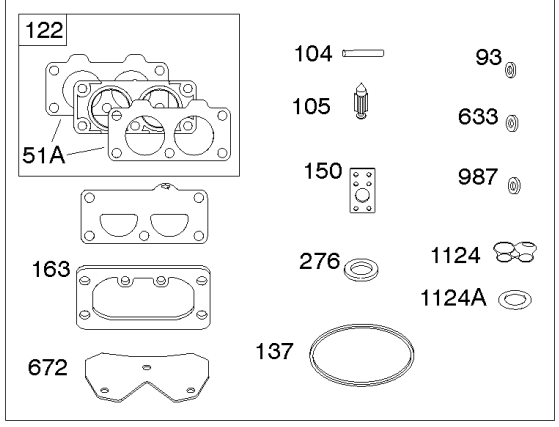

358 ENGINE GASKET SET

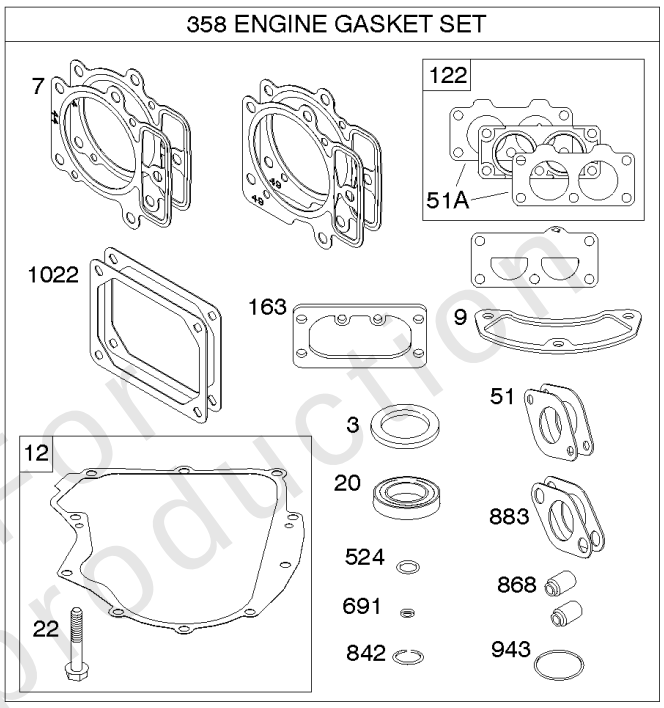

1095 VALVE GASKET SET

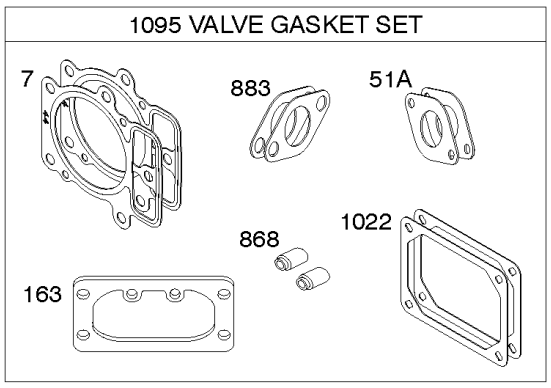

Not For Reproduction

Copyright © Briggs & Stratton. All Rights reserved

Engine Gasket Set, Valve Gasket Set

REF NO	PART NO	QTY	DESCRIPTION
3	391086S		SEAL, Oil -(Magneto Side)
7	693997		GASKET, Cylinder Head
9	690937		GASKET, Breather -Used Before Code Date 14110500
12	594195		GASKET SET, Crankcase
20	795387		SEAL, Oil -(PTO Side)
22	694966		SCREW -(Crankcase Cover/Sump)
51	690949		GASKET, Intake
51A	594427		GASKET, Intake
93	845864		BUSHING, Throttle Shaft
104	694918		PIN, Float Hinge
105	797410		VALVE, Float Needle
121	799132		KIT, Carburetor Overhaul
122	593425		SPACER, Carburetor
137	690994		GASKET, Float Bowl
150	841649		GASKET, Nozzle
163	691001		GASKET, Air Cleaner
276	695410		WASHER, Sealing
358	799117		GASKET SET, Engine
524	691032		SEAL, O-Ring
633	690722		SEAL, Choke/Throttle Shaft
672	690234		GASKET, Carburetor Plate
691	790574		SEAL, Governor Shaft
842	691031		SEAL, O-Ring -(Dipstick Tube)
868	690968		SEAL, Valve
883	690970		GASKET, Exhaust
943	796222		SEAL, O-Ring -(Oil Pump Cover)
987	808183		SEAL, Choke/Throttle Shaft
1022	690971		GASKET, Rocker Cover
1095	694013		GASKET SET, Valve
1124	841653		SEAL, O-Ring -(Fuel Transfer Tube)
1124A	690988		SEAL, O-Ring -(Fuel Transfer Tube)

Not For Reproduction

Copyright © Briggs & Stratton. All Rights reserved

Engine Sump, Oil Cooler, Dipstick/Tube Assembly

Mfg. No: 44T677-0003-G1

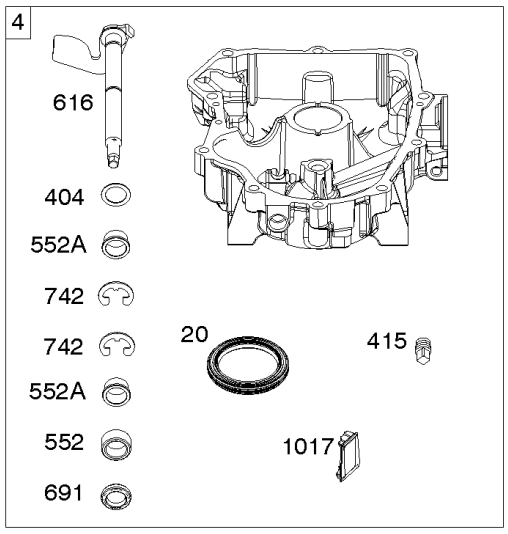

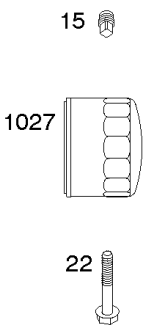

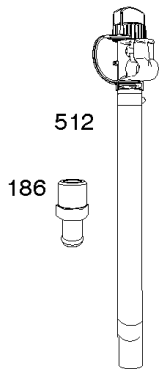

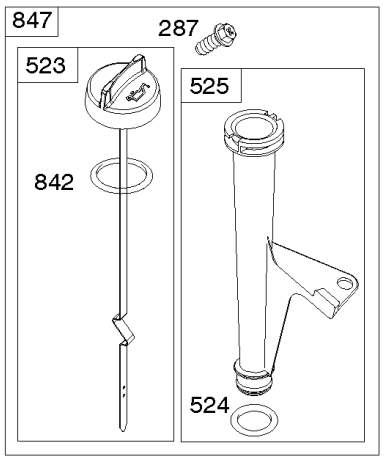

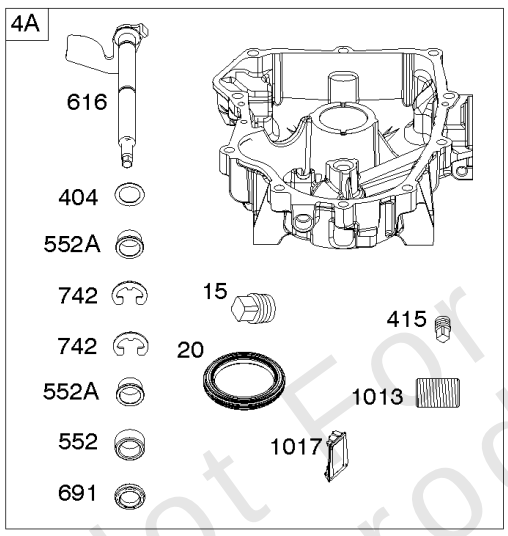

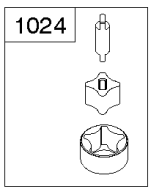

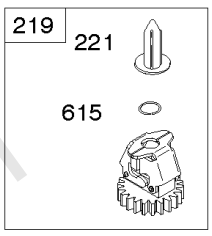

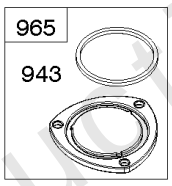

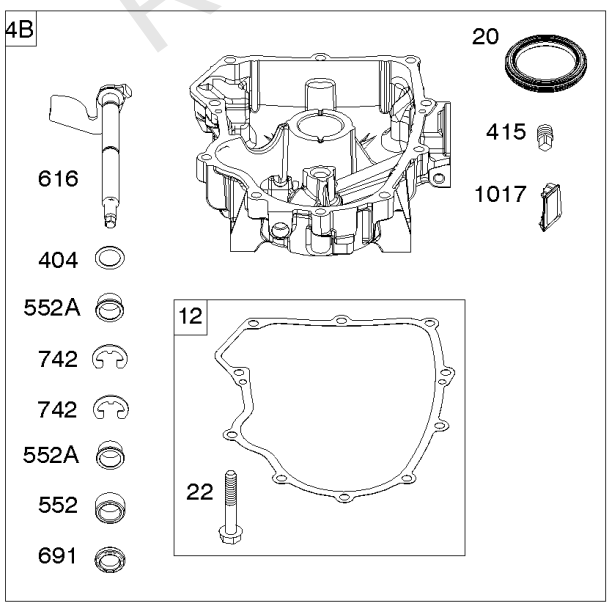

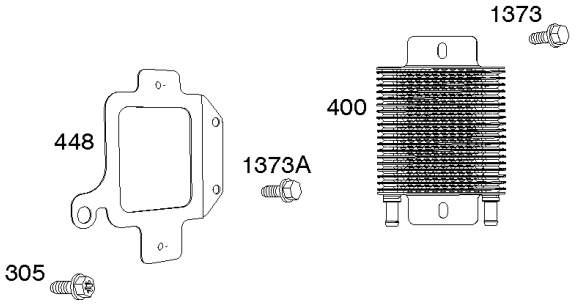

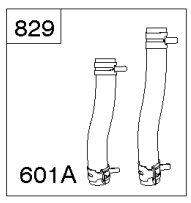

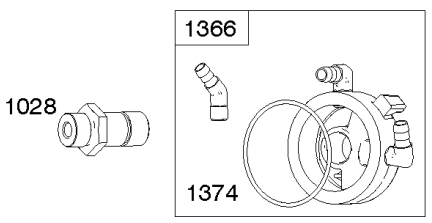

Not For Reproduction

Copyright © Briggs & Stratton. All Rights reserved

Engine Sump, Oil Cooler, Dipstick/Tube Assembly

REF NO	PART NO	QTY	DESCRIPTION
4	594973		SUMP, Engine -Used After Code Date 15071500
4B	797502		SUMP, Engine -Used Before Code Date 15071600
12	594195		GASKET SET, Crankcase
15	690946		PLUG, Oil Drain
20	795387		SEAL, Oil -(PTO Side)
22	694966		SCREW -(Crankcase Cover/Sump)
186	796532		CONNECTOR, Hose -(Oil Drain)
219	793338		GEAR, Governor
220	799772		WASHER -(Governor Gear)
221	841026		CUP, Governor
239	792028		SWITCH, Oil Pressure
287	697820		SCREW -(Dipstick Tube)
305	594618		SCREW -(Blower Housing)
400	796862		COOLER, Oil
404	690442		WASHER -(Governor Crank)
415	794903		PLUG
448	799103		BRACKET, Oil Cooler
512	594200		HOSE, Oil Drain
523	594528		DIPSTICK
524	691032		SEAL, O-Ring
525	691037		TUBE, Dipstick
552	796638		BUSHING, Governor Crank
552A	690553		BUSHING, Governor Crank
601A	841597		CLAMP, Hose
615	698290		RETAINER, Governor Shaft
616	691045		CRANK, Governor
691	790574		SEAL, Governor Shaft
742	690328		RETAINER, E Ring
750	796208		SCREW -(Oil Pump Cover)
829	799104		HOSE, Oil Cooler
842	691031		SEAL, O-Ring -(Dipstick Tube)
847	594609		DIPSTICK/TUBE ASSEMBLY
943	796222		SEAL, O-Ring -(Oil Pump Cover)
965	796221		COVER, Oil Pump
1013	690954		NIPPLE, Oil Filter
1017	796214		SCREEN, Oil Pump
1024	796220		PUMP, Oil
1027	696854		FILTER, Oil
1028	796864		ADAPTER, Oil Filter
1366	799131		DIVERTER, Oil Cooler
1373	695629		SCREW -(Oil Cooler Bracket)
1373A	799105		SCREW -(Oil Cooler Bracket)

Not For Reproduction

Copyright © Briggs & Stratton. All Rights reserved

Engine Sump, Oil Cooler, Dipstick/Tube Assembly

Mfg. No: 44T677-0003-G1

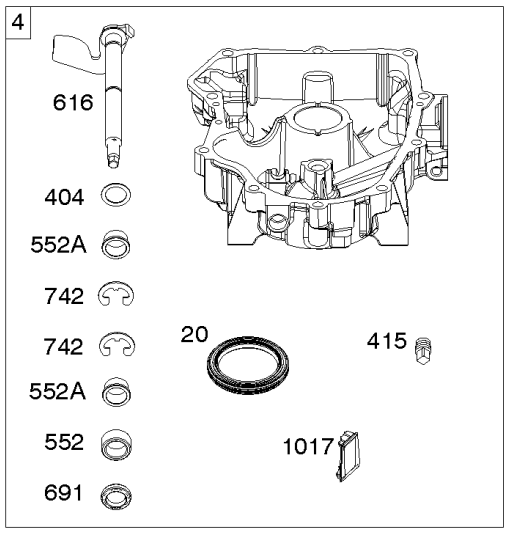

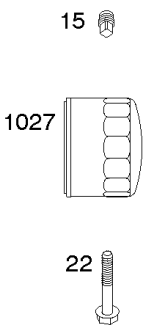

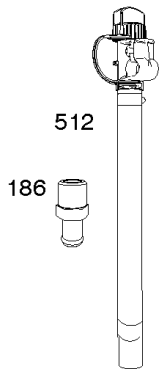

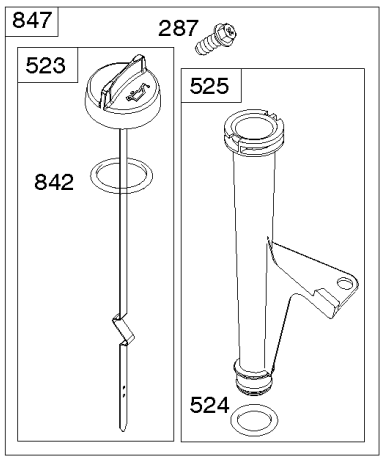

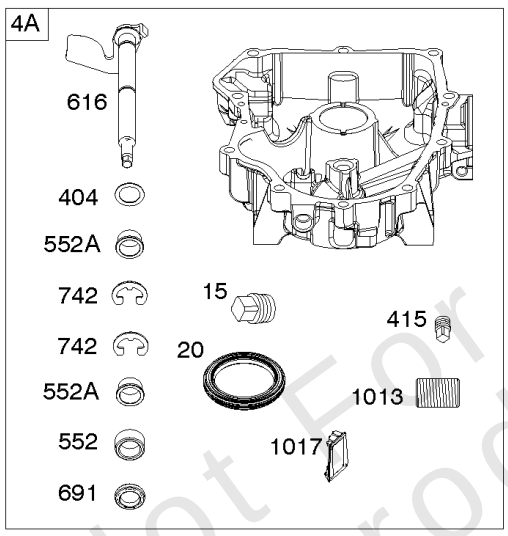

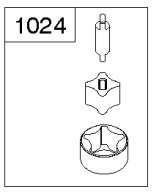

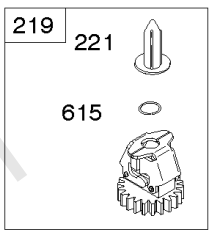

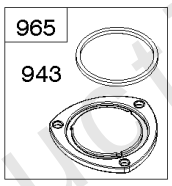

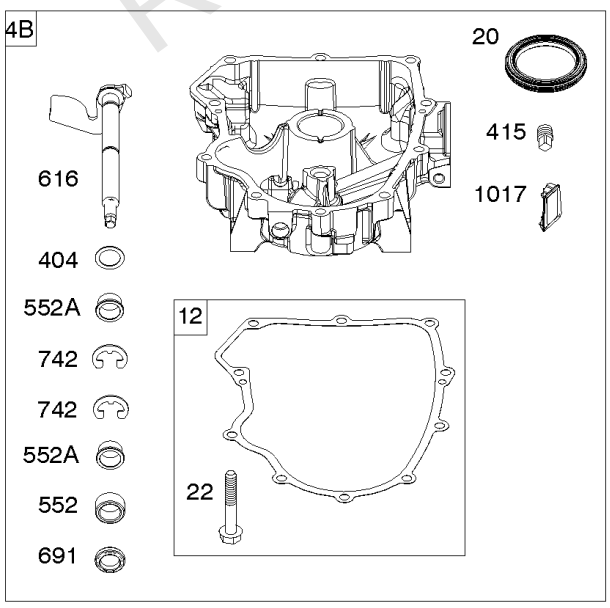

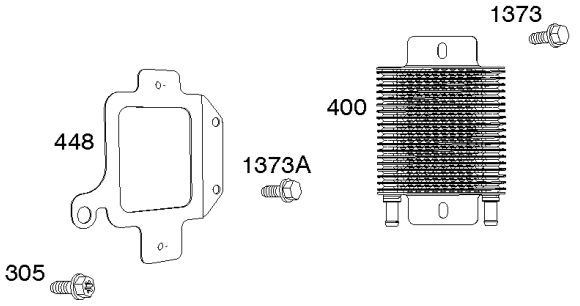

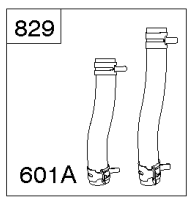

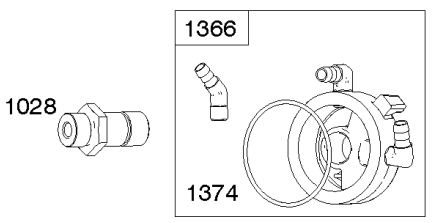

Not For Reproduction

Copyright © Briggs & Stratton. All Rights reserved

Engine Sump, Oil Cooler, Dipstick/Tube Assembly

REF NO	PART NO	QTY	DESCRIPTION
1374	796863		SEAL, O-Ring -(Oil Cooler Diverter)

Not For Reproduction

Copyright © Briggs & Stratton. All Rights reserved

Flywheel, Alternator, Starter, Wire Harness

Mfg. No: 44T677-0003-G1

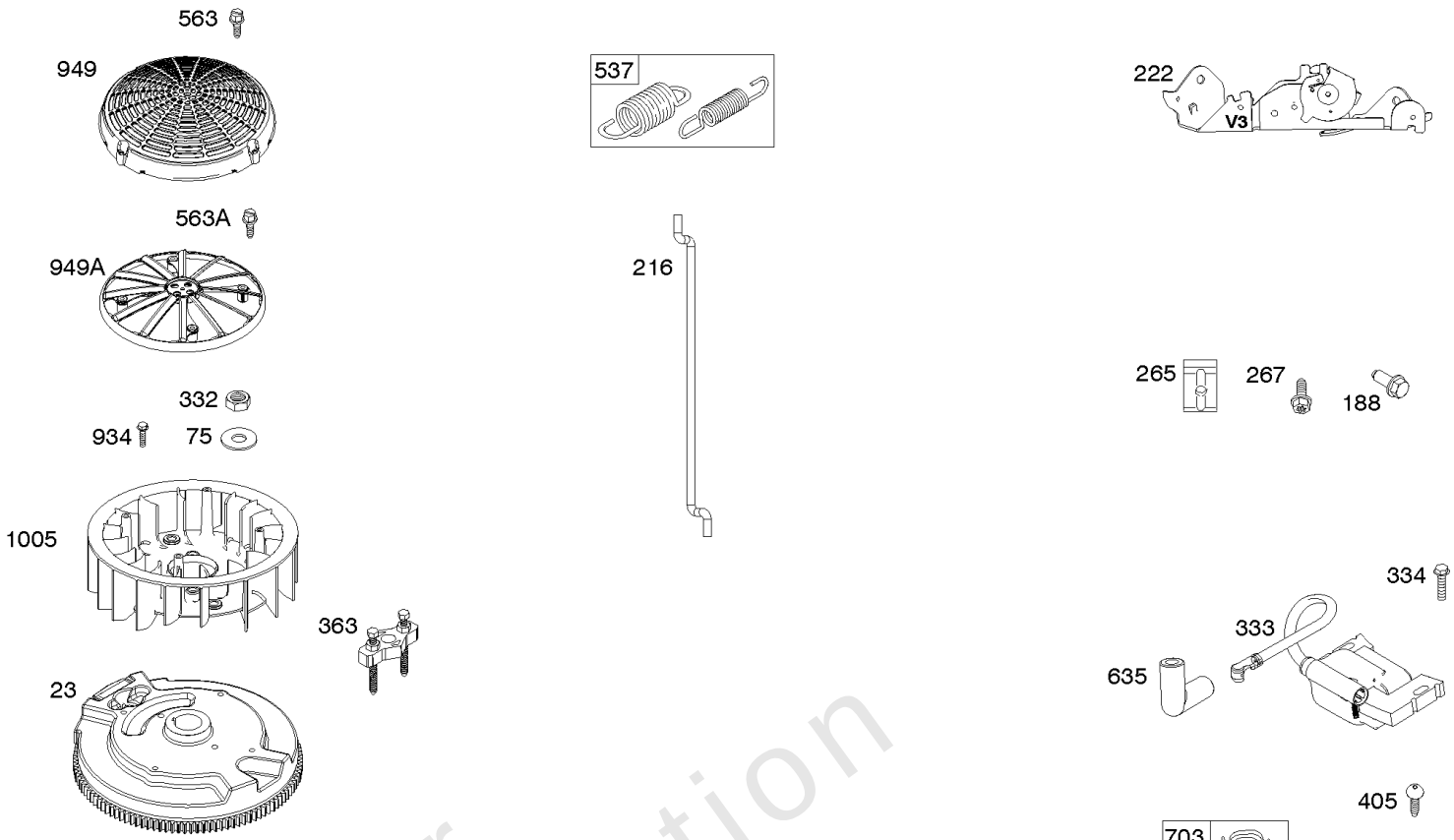

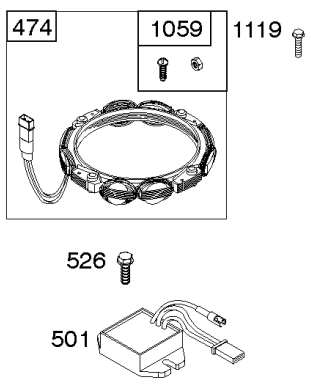

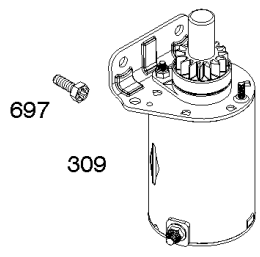

Not For Reproduction

Flywheel, Alternator, Starter, Wire Harness

REF NO	PART NO	QTY	DESCRIPTION
23	594169		FLYWHEEL
75	691056		WASHER -(Flywheel)
188	691108		SCREW -(Control Bracket)
216	691022		LINK, Choke
222	798916		BRACKET, Control -(V3 Manual Choke)
265	691024		CLAMP, Casing
267	792629		SCREW -(Casing Clamp)
309	590476		MOTOR, Starter
332	691059		NUT -(Flywheel)
333	592846		ARMATURE, Magneto
334	691061		SCREW -(Magneto Armature)
363	19203		PULLER, Flywheel
405	594937		SCREW -(Back Plate)
474	592830		ALTERNATOR -(10-16 Amp Regulated)
501	593490		REGULATOR
526	691108		SCREW -(Regulator)
537	594917		KIT, Governor/Idle Spring
563	698425		SCREW -(Debris Screen Guard)
563A	799360		SCREW -(Debris Screen Guard)
635	692076		BOOT, Spark Plug
697	591909		SCREW -(Starter Motor) (Drive Cap)
703	691010		CLIP
729	593826		CLIP, Wire
789	591392		HARNESS, Wiring
934	593638		SCREW -(Fan Retainer)
949	799357		GUARD, Debris Screen
949A	593206		GUARD, Debris Screen
1005	593640		FAN, Flywheel
1059	698516		KIT, Screw/Washer -(Alternator)
1119	691183		SCREW -(Alternator)

Not For Reproduction

Copyright © Briggs & Stratton. All Rights reserved

Replacement Engine - US & Canada

REF NO	PART NO	QTY	DESCRIPTION
	44T9770009	1	Replacement Engine
	797093	1	SB MODEL 44Q7
	-----		Top No-Load Speed: 3350 -Trim: G1
	-----		Service Note: Transfer Manual Choke Control Assembly from the original engine to replacement engine.
	-----		Service Note: Transfer Muffler and/or Spark Arrester Assembly from the original engine if suitable for additional service or add new parts as required

Not For Reproduction

Copyright © Briggs & Stratton. All Rights reserved

Model 40, 44 & 49 Engine Accessories Catalog

Not For Reproduction

Copyright © Briggs & Stratton. All Rights reserved

25-Apr-2024

9000

9000A

9000B

9000C

9000D

Copyright © Briggs & Stratton. All Rights reserved

Maintenance Kits

REF NO	PART NO	QTY	DESCRIPTION
9000	84002442		KIT, Maintenance -(Intek / EXi V-Twin Engines) (Do not use with Home Standby Generators.)
9000A	84002317		KIT, Maintenance -(Professional Series™ V-Twin Engines) (Do not use with Home Standby Generators.)
9000B	84002316		KIT, Maintenance -(Commercial Series V-Twin Engines) (Do not use with Home Standby Generators.)
9000C	84002318		KIT, Maintenance -(Oil Guard™ Engines) (Do not use with Home Standby Generators.)
9000D	84002315		KIT, Maintenance -(Non-Oil Guard™ Engines) (Do not use with Home Standby Generators.)
240	84001895	1	FILTER, Fuel -(40 Micron)
240A	845125	1	FILTER, Fuel -(20 Micron)
337	491055S	2	PLUG, Spark
445	594201	1	FILTER-A/C CARTRIDGE
445A	792105	1	FILTER, A/C Cartridge
445B	798897	1	FILTER, A/C Cartridge
445C	841497	1	FILTER, A/C Cartridge
967	797704	1	FILTER, Pre Cleaner
1027	492932S	1	FILTER, Oil -(Standard)
1027A	696854	1	FILTER, Oil -(Premium)
1027B	842921	1	FILTER, Oil -(Vanguard®)
1027C	84007094	1	FILTER, OIL -(Oil Guard™)
1505	100005		OIL-4 CYCLE 30W 18OZ. -(18 oz. Bottle)
1505A	100028		OIL-4 CYCLE30W 48OZ -(48 oz. Bottle)
1505B	100170		OIL-5QT VANGUARD (CASE) -(5 qt. Bottle)
1505C	100169		OIL-1QT VANGUARD (CASE) -(1 qt. Bottle)

Not For Reproduction

Copyright © Briggs & Stratton. All Rights reserved

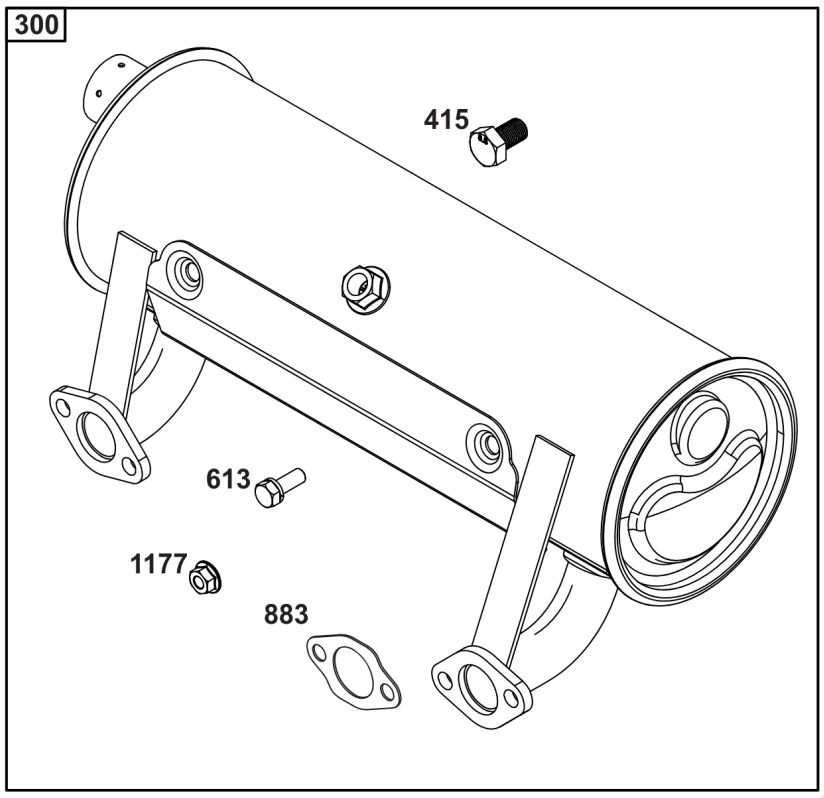

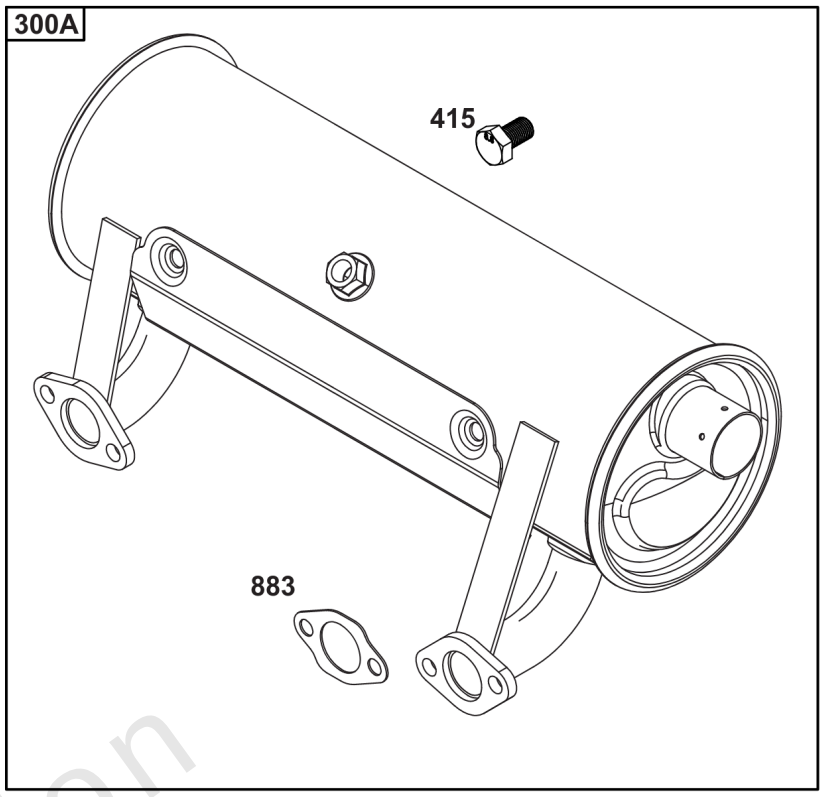

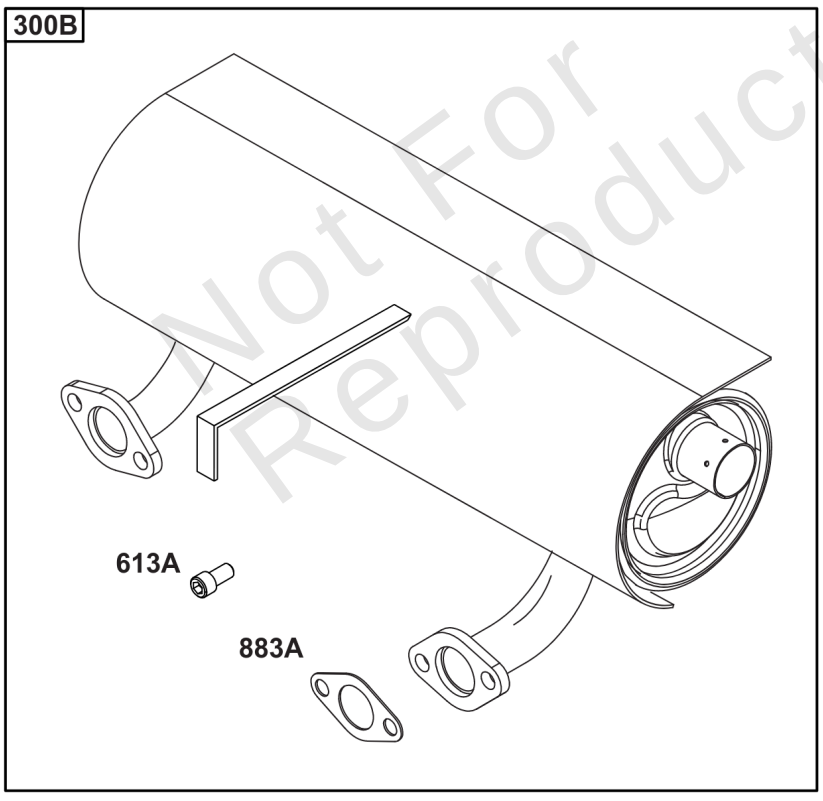

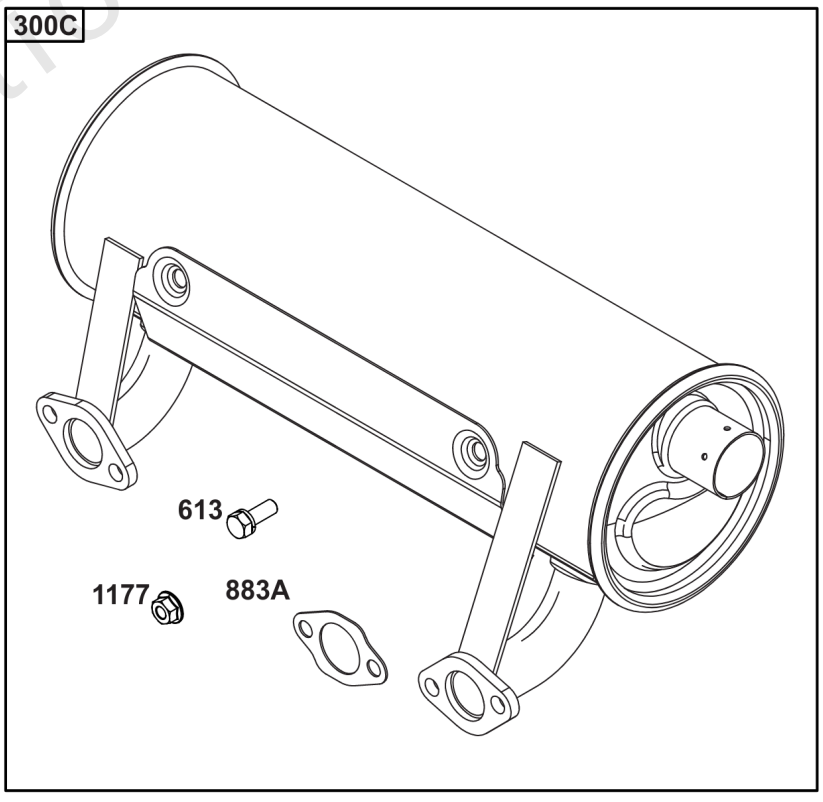

Not For Reproduction

Copyright © Briggs & Stratton. All Rights reserved

Engine Mounted Below Deck Mufflers

REF NO	PART NO	QTY	DESCRIPTION
300	594584	1	KIT-MUFFLER/GUARD -(Oil Filter Side Outlet) (Engine Supported) (O2 Sensor Port)
300A	593877	1	MUFFLER -(Starter Side Outlet) (Engine Supported) (O2 Sensor Port)
300B	594583	1	MUFFLER -(Starter Side Outlet) (Engine Supported) (No O2 Sensor Port)
300C	692120	1	MUFFLER -(Starter Side Outlet) (No O2 Sensor Port)
415	596859	1	PLUG -(O2 Sensor Port)
613	690341	4	SCREW -(Muffler)
613A	690363	4	SCREW -(Muffler)
883	594365	2	GASKET, Exhaust
883A	690970	2	GASKET, Exhaust
1177	690941	4	NUT -(Muffler)

Not For Reproduction

Copyright © Briggs & Stratton. All Rights reserved

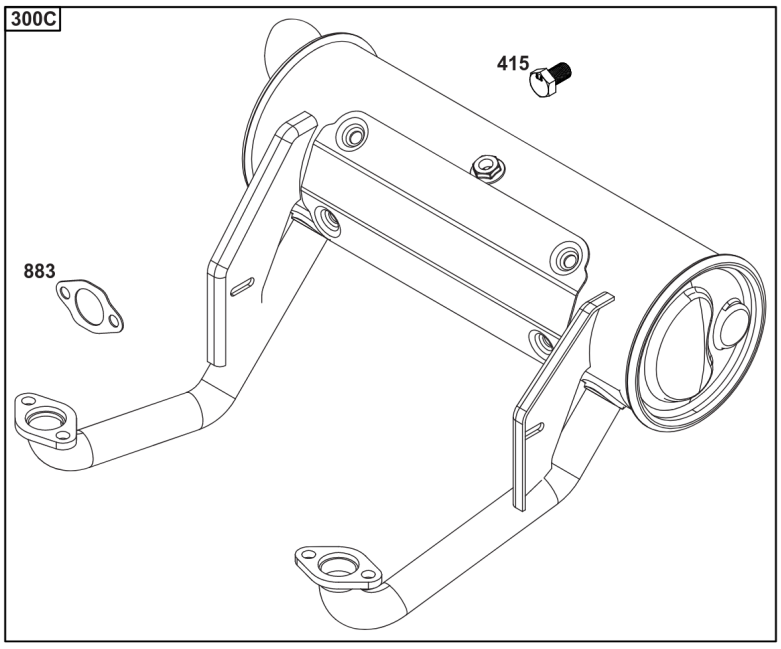

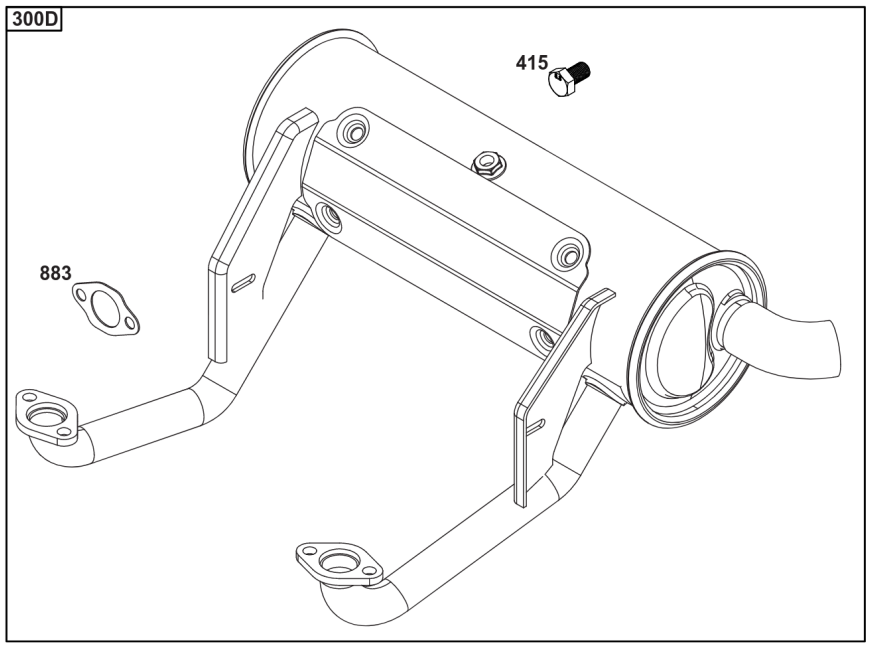

Not For Reproduction

Copyright © Briggs & Stratton. All Rights reserved

Engine Mounted Above Deck Mufflers

REF NO	PART NO	QTY	DESCRIPTION
300C	595138	1	MUFFLER -(Oil Filter Side Outlet) (Self-Supporting) (O2 Sensor Port)
300D	595139	1	MUFFLER -(Starter Side Outlet) (Self-Supporting) (O2 Sensor Port)
415	596859	1	PLUG -(O2 Sensor Port)
883	594365	2	GASKET, Exhaust

Not For Reproduction

Copyright © Briggs & Stratton. All Rights reserved

676

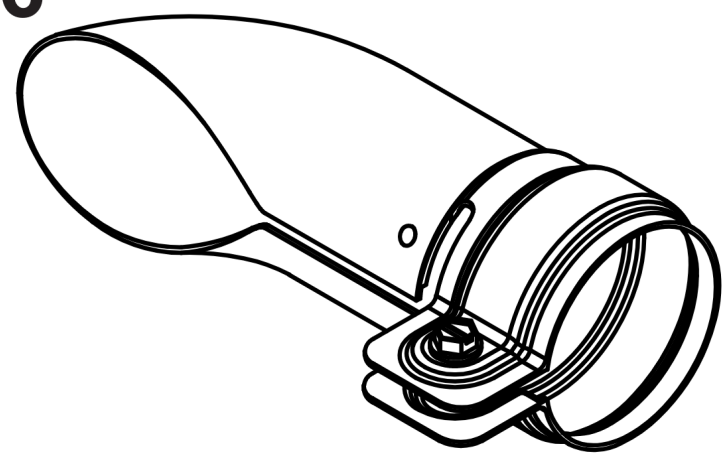

994

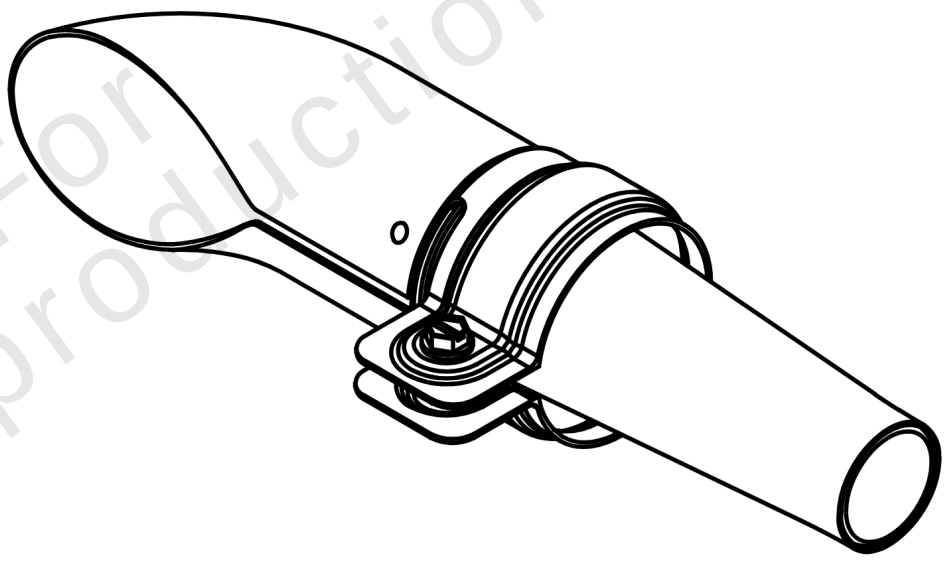

Not For Reproduction

994A

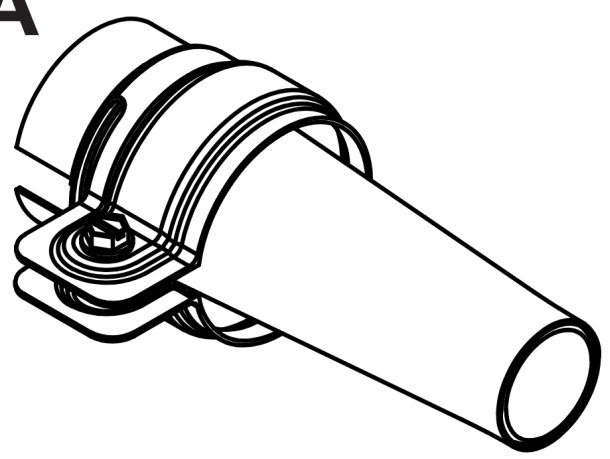

Copyright © Briggs & Stratton. All Rights reserved

Spark Arrester/Deflector

REF NO	PART NO	QTY	DESCRIPTION
676	593869	1	DEFLECTOR, Muffler -(For Below Deck Mufflers Only)
994	593885	1	ARRESTOR, Spark -(For Below Deck Mufflers Only)
994A	593868	1	ARRESTOR, Spark -(For Below Deck Mufflers Only)

Not For Reproduction

Copyright © Briggs & Stratton. All Rights reserved

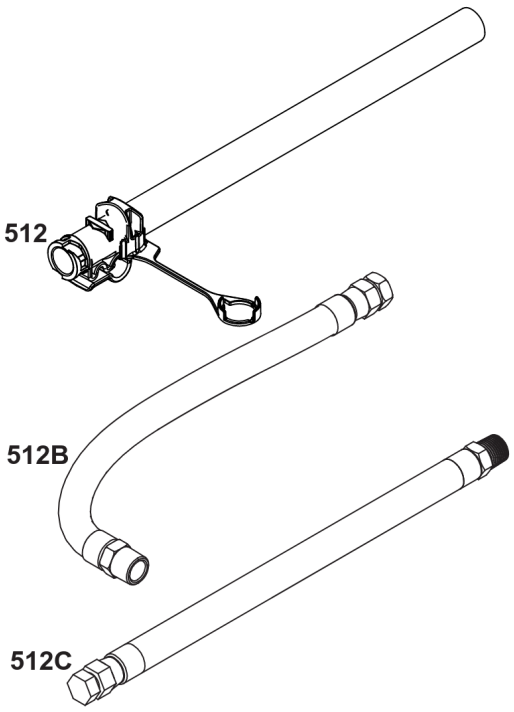

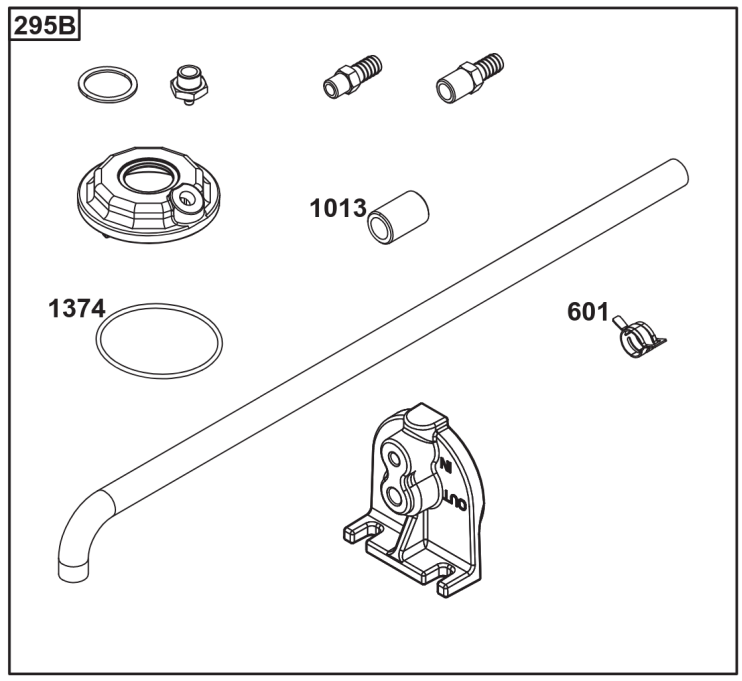

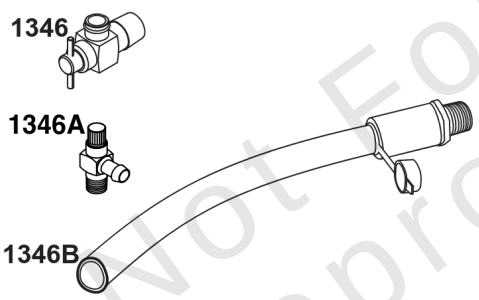

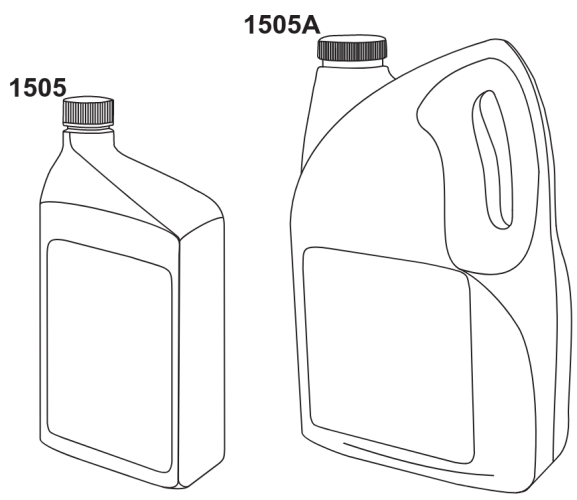

Not For Reproduction

Copyright © Briggs & Stratton. All Rights reserved

Lubrication

REF NO	PART NO	QTY	DESCRIPTION
186	796532	1	CONNECTOR, Hose -(Threaded Engine Block Connector for EZ-Oil Drain Hose) (Order hose separate)
239	690233	1	SWITCH, Oil Pressure -(2-4 PSI Normally-Closed Switch)
239A	491657S	1	SWITCH, Oil Pressure -(3-5 PSI Normally-Closed Switch)
239B	841281	1	SWITCH, Oil Pressure -(7-10 PSI Normally-Closed Switch)
239C	694115	1	SWITCH, Oil Pressure -(9-13 PSI Normally-Closed Switch)
239D	697049	1	SWITCH, Oil Pressure -(3-6 PSI Normally-Open Switch)
295B	594271	1	ADAPTER, Remote Oil Filter -(Remote Oil Filter Kit)
512	594200	1	HOSE, Oil Drain -(EZ-Oil Drain Hose, 10.5") (Order threaded engine block connector separate)
512	593635	1	HOSE, Oil Drain -(EZ-Oil Drain Hose, 13.75") (Order threaded engine block connector separate)
512B	1723165SM	1	HOSE, Oil Drain, 10-1/2" Long, 3/8-18 Fittings -(10.5")
512C	5048681SM	1	HOSE, OIL DRAIN -(12.5")
517	593633	1	RETAINER, Oil Drain
601	841597	4	CLAMP, Hose
1013	690954	1	NIPPLE, Oil Filter
1346	844802	1	VALVE, Oil Drain Shut Off
1346A	492031	1	VALVE, Oil Drain Shut Off
1346B	5401WEB	1	VALVE, Oil Drain Shut Off -(1/4 Turn Oil Drain Valve with Hose)
1374	796863	1	SEAL, O-Ring
1505	100169		OIL-1QT VANGUARD (CASE) -(1 qt. Bottle)
1505A	100170		OIL-5QT VANGUARD (CASE) -(5 qt. Bottle)

Not For Reproduction

Copyright © Briggs & Stratton. All Rights reserved

300A

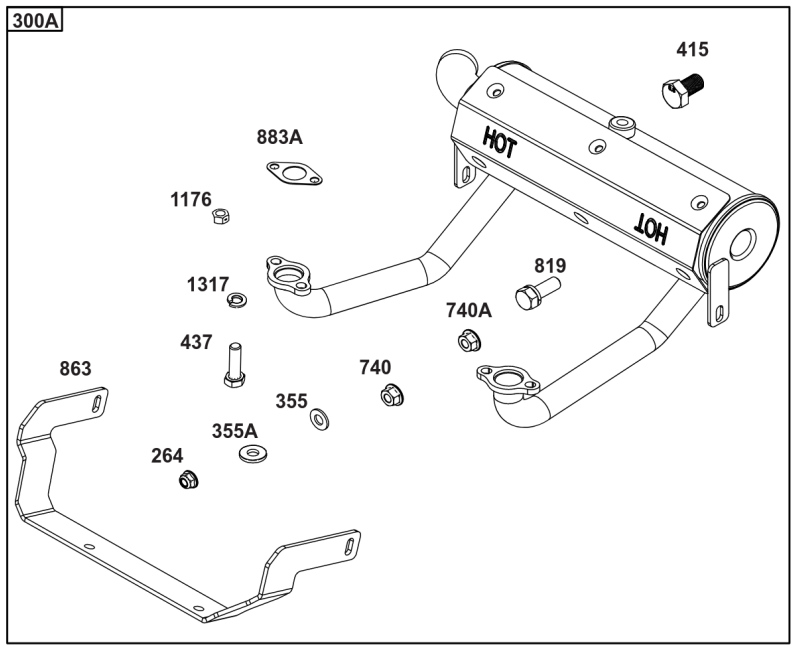

300B

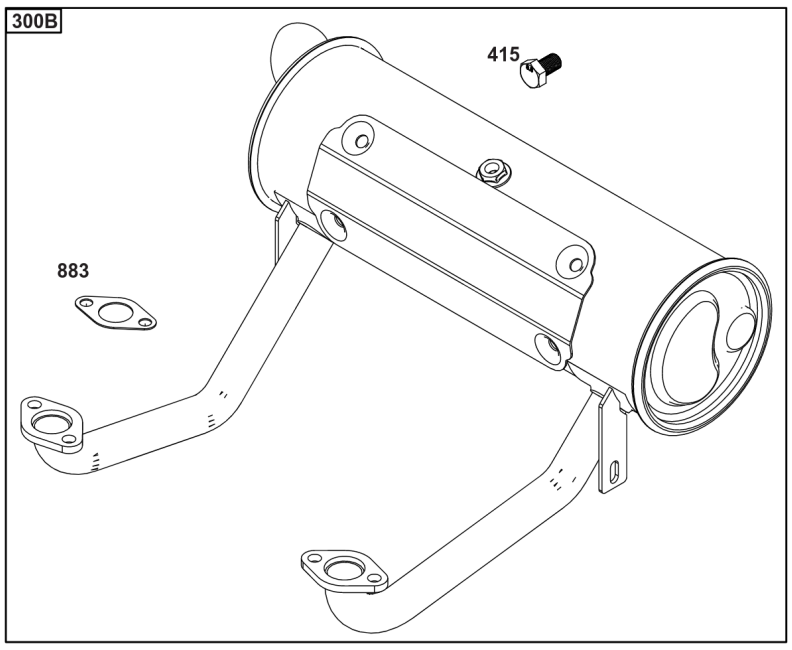

300C

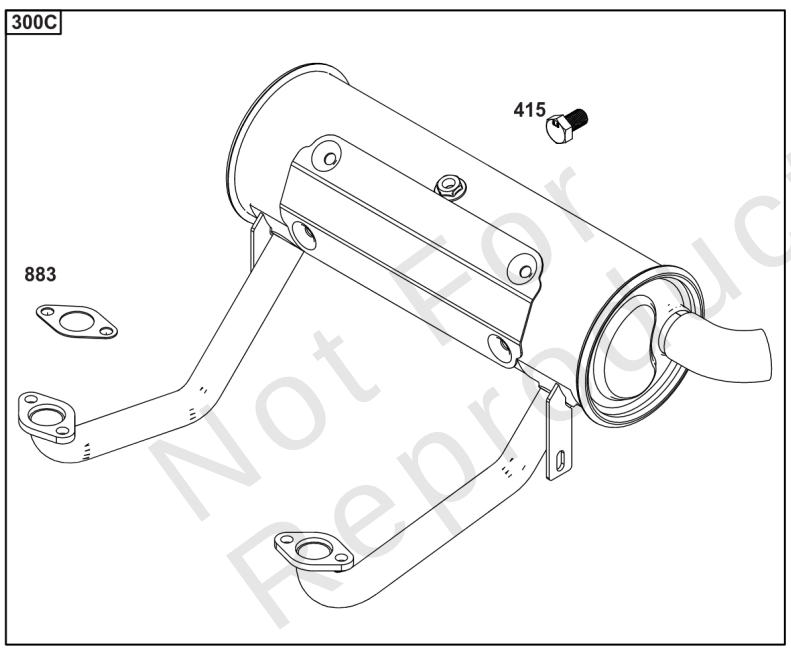

300D

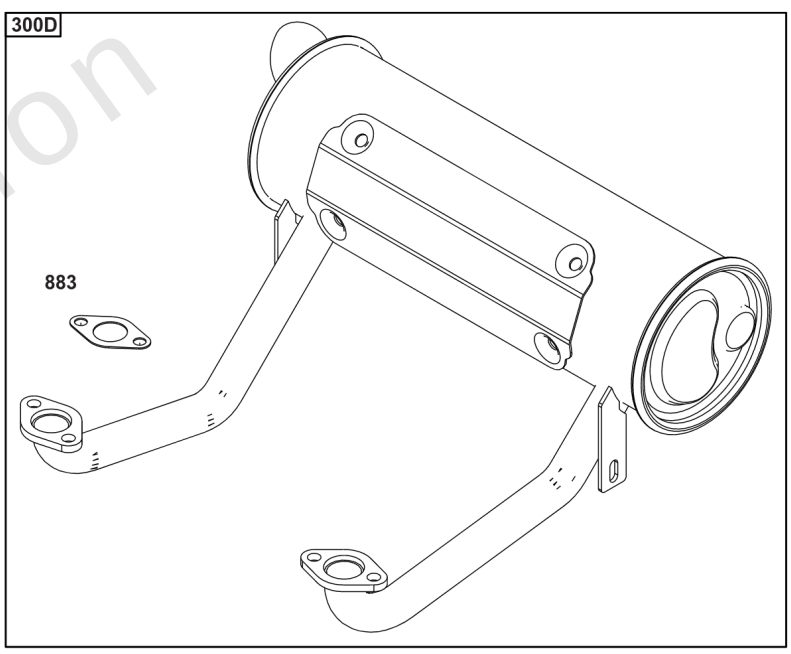

Not For Reproduction

Implement Mounted Above Deck Mufflers

REF NO	PART NO	QTY	DESCRIPTION
300A	594585	1	MUFFLER -(Oil Filter Side Outlet) (Implement Supported) (O2 Sensor Port)
300B	595134	1	MUFFLER -(Oil Filter Side Outlet) (O2 Sensor Port)
300C	595135	1	MUFFLER -(Starter Side Outlet) (O2 Sensor Port)
300D	595136	1	MUFFLER -(Oil Filter Side Outlet)
264	703465	4	NUT, 5/16-18, GR5 -(Muffler Adapter)
355	5025292SM	4	WASHER, 5/16" GD.9 FL -(Muffler Bracket)
355A	5025155SM	2	WASHER, 5/16 -(Muffler Bracket)
415	596859	1	PLUG -(O2 Sensor Port)
437	703585	4	CAPSCREW, 5/16-18X1 -(Exhaust Manifold)
740	703164	2	NUT -(Muffler Bracket)
740A	703115	2	NUT -(Muffler Bracket)
819	690341	4	SCREW -(Muffler Bracket)
863	597480	1	BRACKET, Muffler
883	594365	2	GASKET, Exhaust
883A	690970	2	GASKET, Exhaust
1176	690941	4	NUT -(Exhaust Manifold)
1317	703116	4	LCKWSHR -(Exhaust Manifold)

Not For Reproduction

Copyright © Briggs & Stratton. All Rights reserved

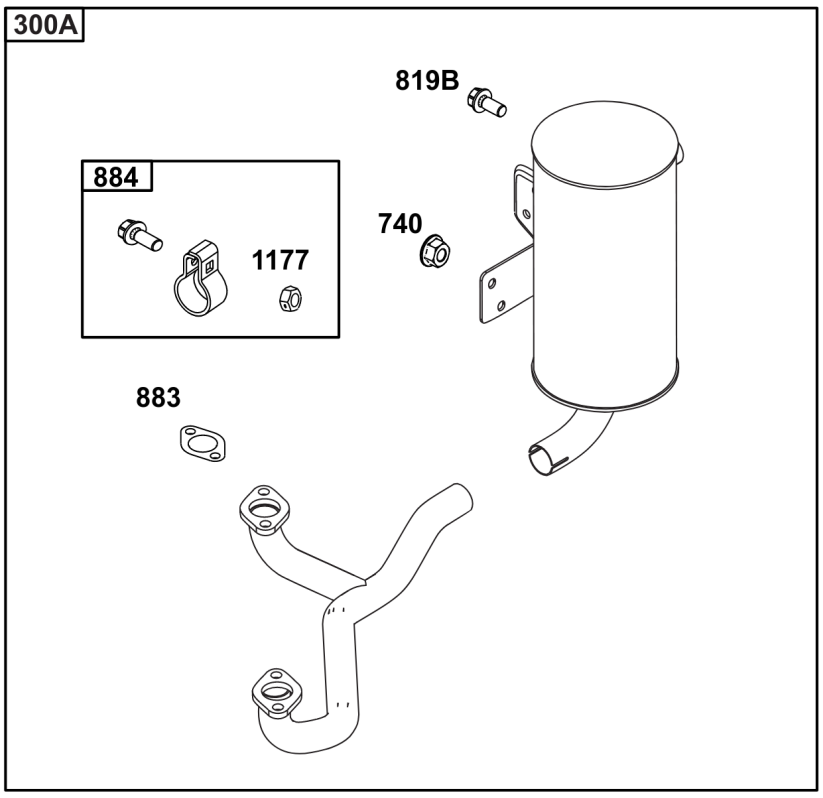

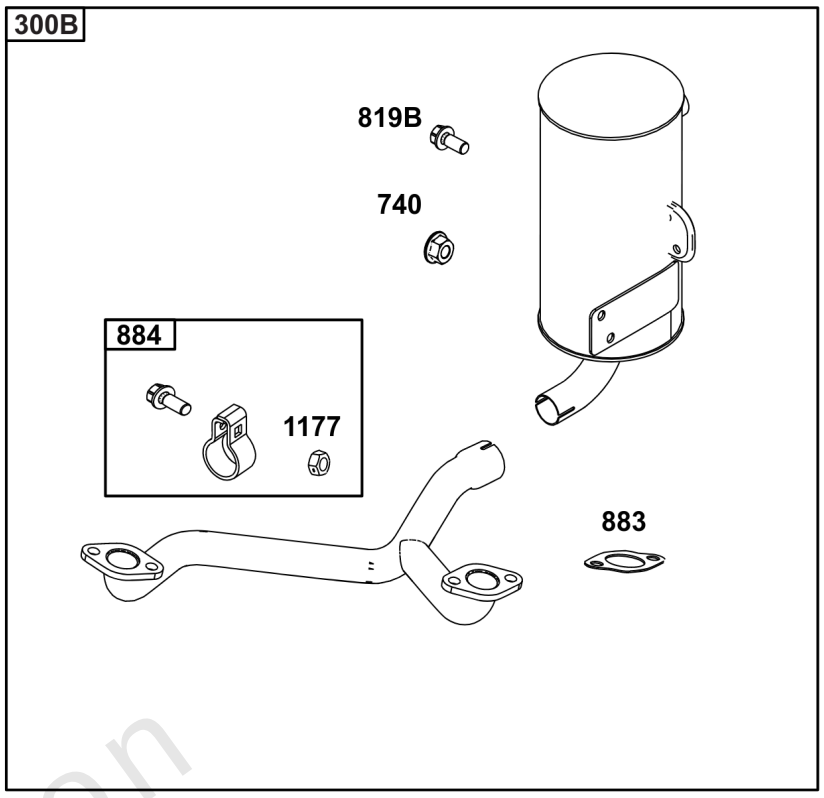

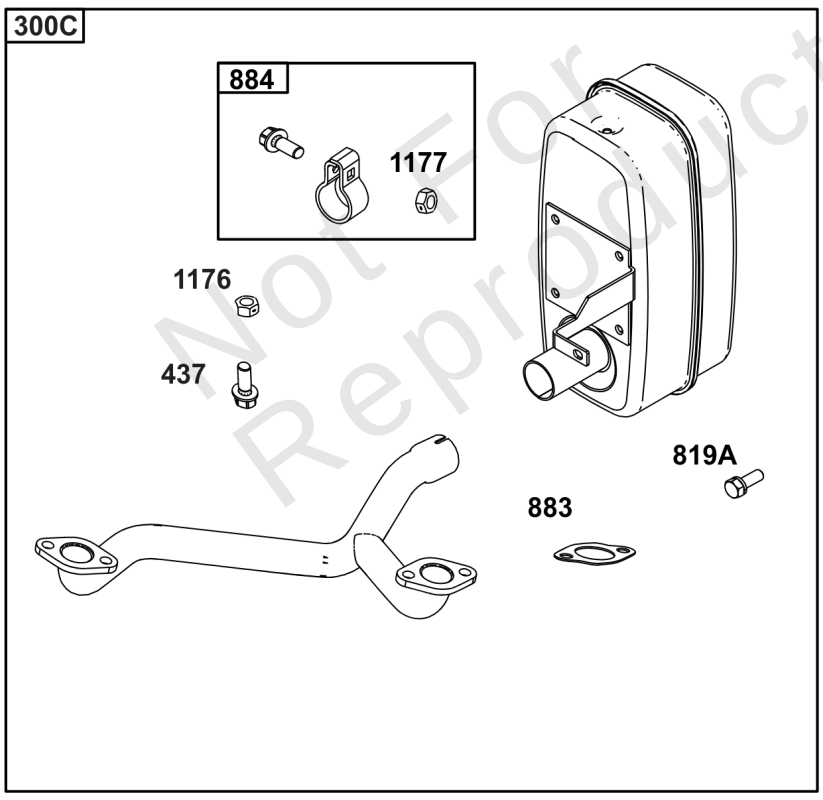

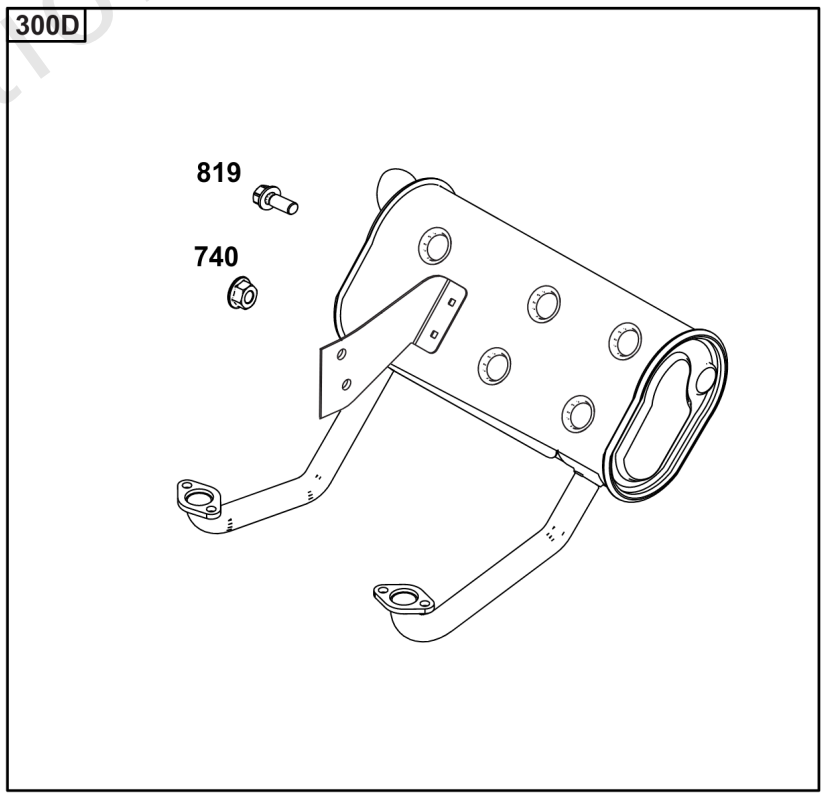

Not For Reproduction

Exhaust/Muffler Configurations

REF NO	PART NO	QTY	DESCRIPTION
300A	771127	1	MUFFLER -(Oil Filter Side Outlet)(Commercial & Professional Series)
300B	771128	1	MUFFLER -(Starter Side Outlet)(Commercial & Professional Series)
300C	595822	1	MUFFLER -(Starter Side Outlet)(Commercial & Professional Series)
300D	84003680	1	MUFFLER -(Oil Filter Side Outlet) (Commercial & Professional Series)(Vanguard 810 & 810 EFI) (Compatible with 593868 Spark Arrester, 593885 Spark Arrester with Deflector.) (Equipped with plug for blocking off O2 sensor port for non EFI engines.)
437	690341	4	SCREW -(Exhaust Manifold)
740	704067	2	NUT, HEX FLNG,5/16-18 -(Muffler Bracket)
819	592604	2	SCREW -(Muffler Bracket)
819A	695629	4	SCREW -(Muffler Bracket)
819B	692062	2	SCREW -(Muffler Bracket)
883	594365	2	GASKET, Exhaust
884	691956	1	CLAMP, Muffler
1176	690941	4	NUT -(Exhaust Manifold)
1177	793859	1	NUT -(Muffler)

Not For Reproduction

Copyright © Briggs & Stratton. All Rights reserved

578A

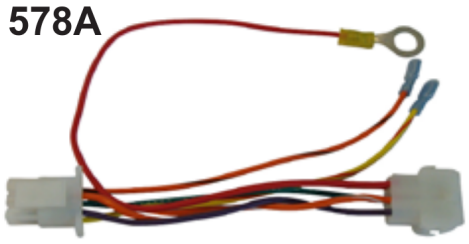

1616

920

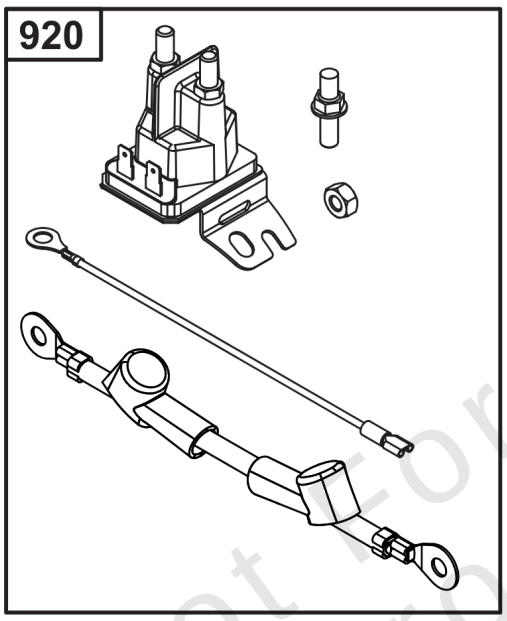

983

578

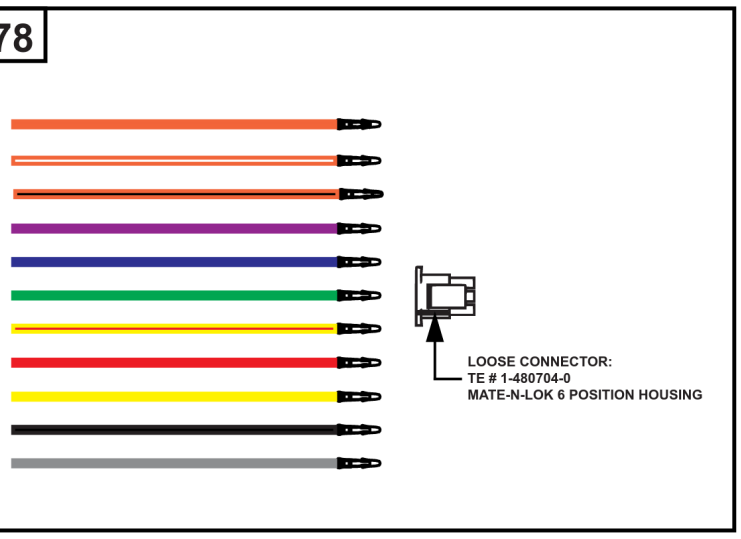

853

Not For Reproduction

Copyright © Briggs & Stratton. All Rights reserved

Electrical

REF NO	PART NO	QTY	DESCRIPTION
578	84007350	1	WIRE ASSEMBLY -(Wire Harness Adapter Aids in repowering engine application with Male 6-Pin connector and wires create custom adapter configurations.)
578A	19631	1	TOOL, CUSTOM HARNESS -(6-pin Wire Harness Adapter) (Aids in repowering engine application to an EFI engine)
853	84003359	1	ADAPTER, WIRE -(Wire Harness Adapter) (Aids in repowering ExMark) (Flat 6-spade connector to Briggs & Stratton 6-Pin connector)
920	84002147	1	SOLENOID, STARTER -(Starter Solenoid Kit) (Aids in Repowering when original is solenoid shift)
983	5103809YP	1	LIGHT, Indicator -(MIL Light Indicator) (LED Red)
1616	19626	1	CODE READER -(Tiny Scan Code Reader)

Not For Reproduction

Copyright © Briggs & Stratton. All Rights reserved

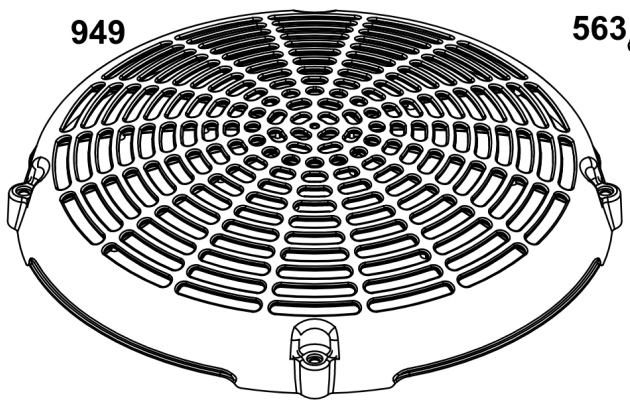

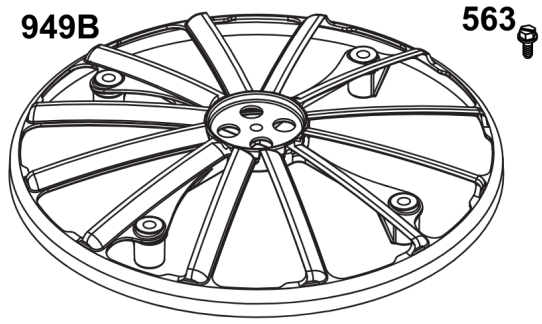

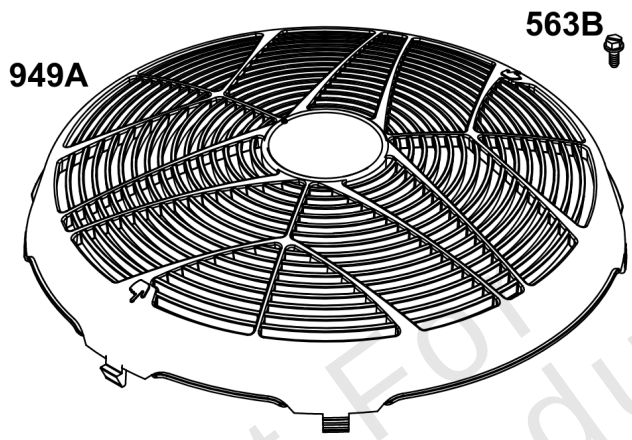

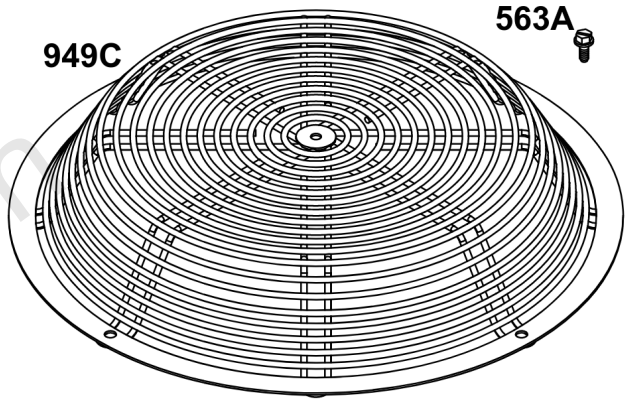

Not For Reproduction

Copyright © Briggs & Stratton. All Rights reserved

Flywheel Guards

REF NO	PART NO	QTY	DESCRIPTION
563	799360	1	SCREW -(Debris Screen Guard)
563A	597574	1	SCREW -(Debris Screen Guard)
563B	799359	1	SCREW -(Debris Screen Guard)
949	799357	1	GUARD, Debris Screen -(Static Cover Flywheel) (Requires 4 x 799360 Screw)
949A	797420YP	1	GUARD, Debris Screen -(Static Cover Flywheel High Flow) (Requires 4 x 799360 Screw)
949B	593206	1	GUARD, Debris Screen -(Static Cover Flywheel) (Requires 4 x 799359 Screw)
949C	597573	1	GUARD, Debris Screen -(Wire Static Flywheel Cover) (Requires 4x 597574 Screw) (For Commercial Series)

Not For Reproduction

Copyright © Briggs & Stratton. All Rights reserved

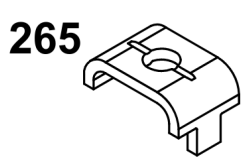

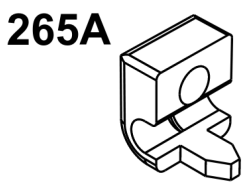

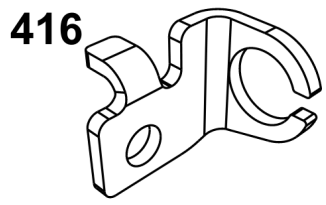

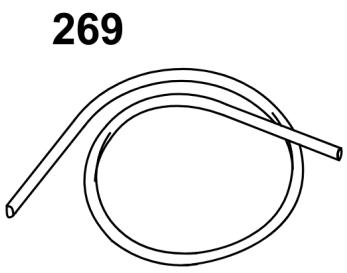

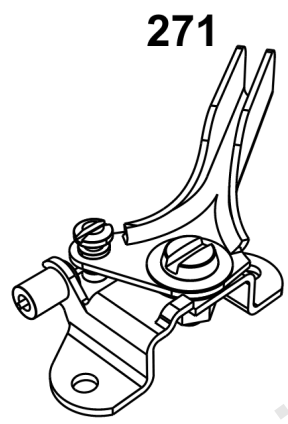

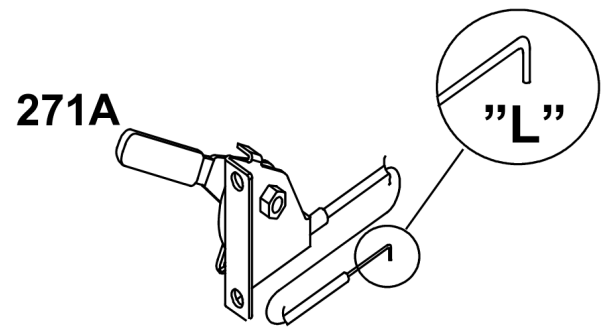

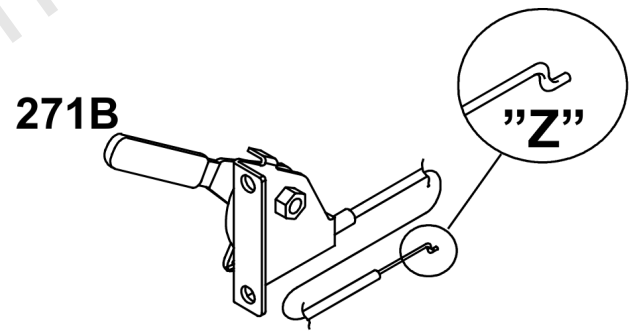

Not For Reproduction

Copyright © Briggs & Stratton. All Rights reserved

Speed Control

REF NO	PART NO	QTY	DESCRIPTION
265	691024	1	CLAMP, Casing -(Casing Clamp for Hard Casing)
265A	690798	1	CLAMP, Casing -(Casing Clamp for Soft Casing)
267	792629	1	SCREW -(Screw for Casing Clamp)
269	93907	1	WIRE, Control -(Control Wire 100')
271	691028	1	LEVER, Control -(Speed Control Lever Assembly)
271A	692105	1	LEVER, Control -(“L” formed end Speed Control Lever Assembly)
271B	692541	1	LEVER, Control -(“Z” formed end Speed Control Lever Assembly)
416	595196	1	BRACKET, Throttle Cable -(Casing Clamp for Snap-In Casing)

Not For Reproduction

Copyright © Briggs & Stratton. All Rights reserved

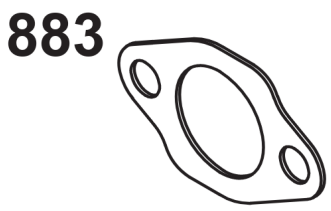

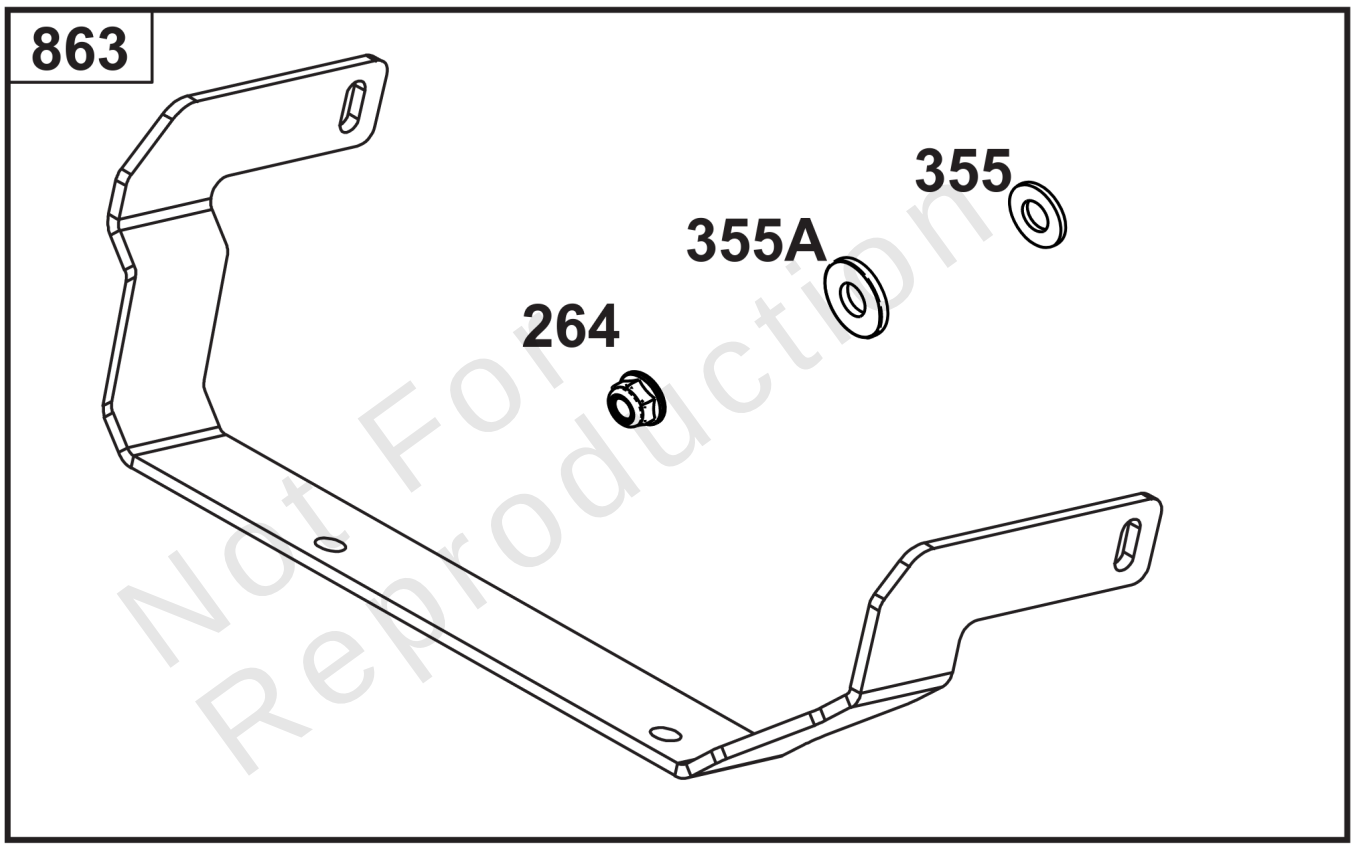

Not For Reproduction

Copyright © Briggs & Stratton. All Rights reserved

Muffler Mounting Hardware

REF NO	PART NO	QTY	DESCRIPTION
264	703465	4	NUT, 5/16-18, GR5 -(Muffler Adapter)
296	591756	4	STUD -(Muffler)
355	5025292SM	4	WASHER, 5/16" GD.9 FL -(Muffler Bracket)
355A	5025155SM	2	WASHER, 5/16 -(Muffler Bracket)
613	690341	4	SCREW -(Muffler)
613A	690363	4	SCREW -(Muffler)
863	597480	1	BRACKET, Muffler
883	594365	2	GASKET, Exhaust
883A	690970	2	GASKET, Exhaust
1177	690941	4	NUT -(Muffler)

Not For Reproduction

Copyright © Briggs & Stratton. All Rights reserved

Copyright © Briggs & Stratton. All Rights reserved