Parts Manual

Mfg. No: 543777-0110-E2

Copyright © Briggs & Stratton. All Rights reserved

18-Apr-2024

Model Components — Page

Air Cleaner, Cyclonic Air Cleaner. . . . 4
Alternator, Regulators, Starter Motor, Harness's. . . . 6
Camshaft, Crankcase Covers. . . . 8
Carburetor Overhaul Kit, Engine/Valve Gasket Sets. . . . 10
Carburetor, Fuel Supply. . . . 12
Control Brackets, Springs/Rods, Air Guides. . . . 16
Cylinders, Crankshaft, Piston/Rings/Rods. . . . 18
Flywheel, Flywheel Fans, Rotating Screen. . . . 22
Intake Manifold, Intake Elbows, Muffler. . . . 24
Oil Cooler, Blower Housings. . . . 26
Replacement Engine - US & Canada. . . . 28
Rocker Arm Covers, Cylinder Heads. . . . 29
Model 54-61 Engine Accessories Catalog. . . . 33
- Maintenance Kits. . . . 34
- Lubrication. . . . 36
- Oil Filter Side Outlet Mufflers. . . . 38
- Center Outlet Mufflers. . . . 40
- Starter Side Outlet Mufflers. . . . 42
- Muffler Bracket Kits. . . . 44
- Speed Control. . . . 46
- Electrical. . . . 48
- Stub Shafts. . . . 50
- Spark Arrester/Deflector. . . . 52
- Air Intake. . . . 54
- Guarding. . . . 56
- Electronic Throttle Kit. . . . 58

Not For Reproduction

Copyright © Briggs & Stratton. All Rights reserved

Air Cleaner, Cyclonic Air Cleaner

Mfg. No: 543777-0110-E2

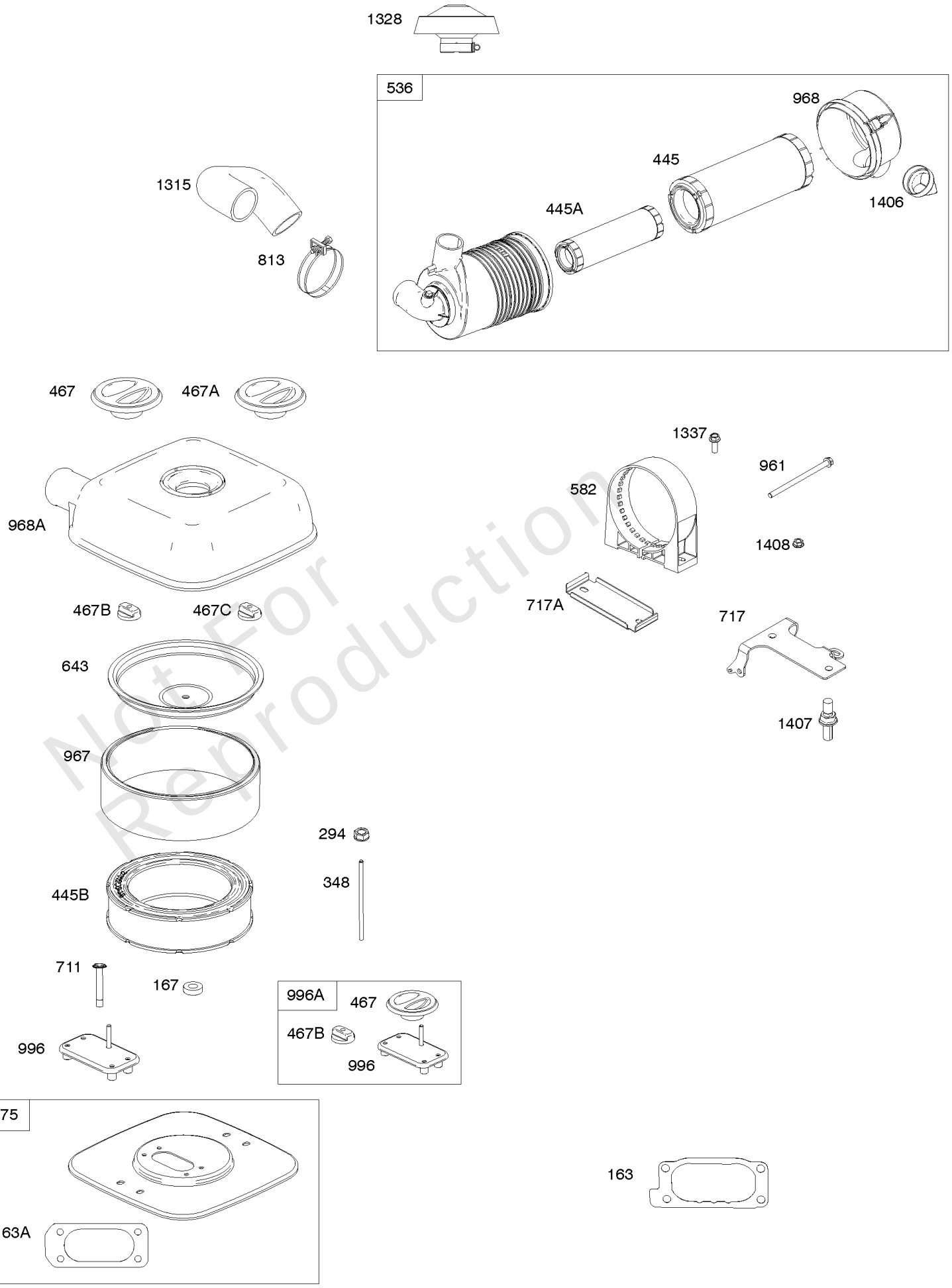

Not For Reproduction

Air Cleaner, Cyclonic Air Cleaner

REF NO	PART NO	QTY	DESCRIPTION
163	807375		GASKET, Air Cleaner -(Carburetor Side)
294	690939		NUT -(Carburetor Shield)
348	843360		STUD -(Carburetor Shield) (M6x134mm)
445	841497		FILTER, A/C Cartridge
445A	821136		FILTER, A/C Cartridge
445B	692519		FILTER, A/C Cartridge
467	846008		KNOB, Air Cleaner Cover -(M8) -Used After Code Date 14012700
467A	841846		KNOB, Air Cleaner Cover -(M6) -Used Before Code Date 14012800
467B	846007		KNOB, Air Cleaner Cover -(M8) -Used After Code Date 14012700
467C	844618		KNOB, Air Cleaner Cover -(M6) -Used Before Code Date 14012800
536	809670		CLEANER, Air
582	809878		CLAMP, Air Cleaner
643	844932		RETAINER, Air Cleaner
711	843361		SCREW -(Carburetor Shield) (M6x136mm)
717	842529		BRACKET, Air Cleaner
717A	841886		BRACKET, Air Cleaner
813	807376		CLAMP -(Air Cleaner Hose)
961	846829		SCREW -(Air Cleaner Bracket) (M8x125mm)
961	842530		SCREW -(Air Cleaner Bracket) (M8x30mm)
967	692520		FILTER, Pre Cleaner
968	842621		COVER, Air Cleaner
968A	841847		COVER, Air Cleaner
996	846006		SHIELD, Carburetor -(M8 Stud) -Used After Code Date 14012700
996A	846013		SHIELD, Carburetor -(M8 Stud) -Used Before Code Date 14012800
1315	809905		HOSE, Air Cleaner
1328	809907		CAP, A/C Rain
1337	807382		SCREW -(Air Cleaner Clamp) (M8x25mm)
1406	842623		VALVE, Debris
1407	842531		STUD -(Air Cleaner Bracket)
1408	690941		NUT -(Air Cleaner Bracket)

Not For Reproduction

Copyright © Briggs & Stratton. All Rights reserved

Alternator, Regulators, Starter Motor, Harness's

Mfg. No: 543777-0110-E2

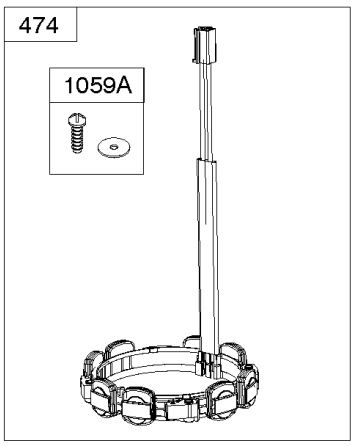

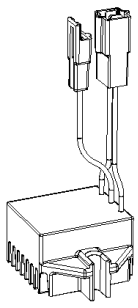

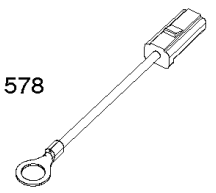

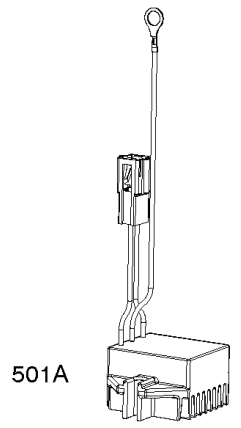

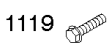

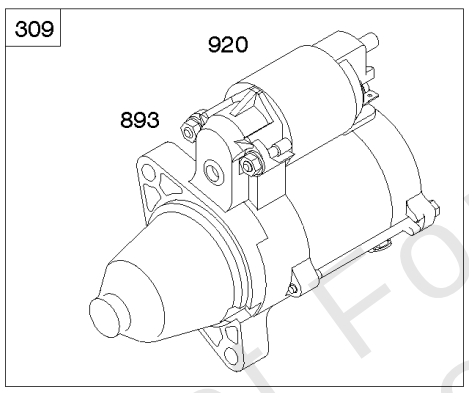

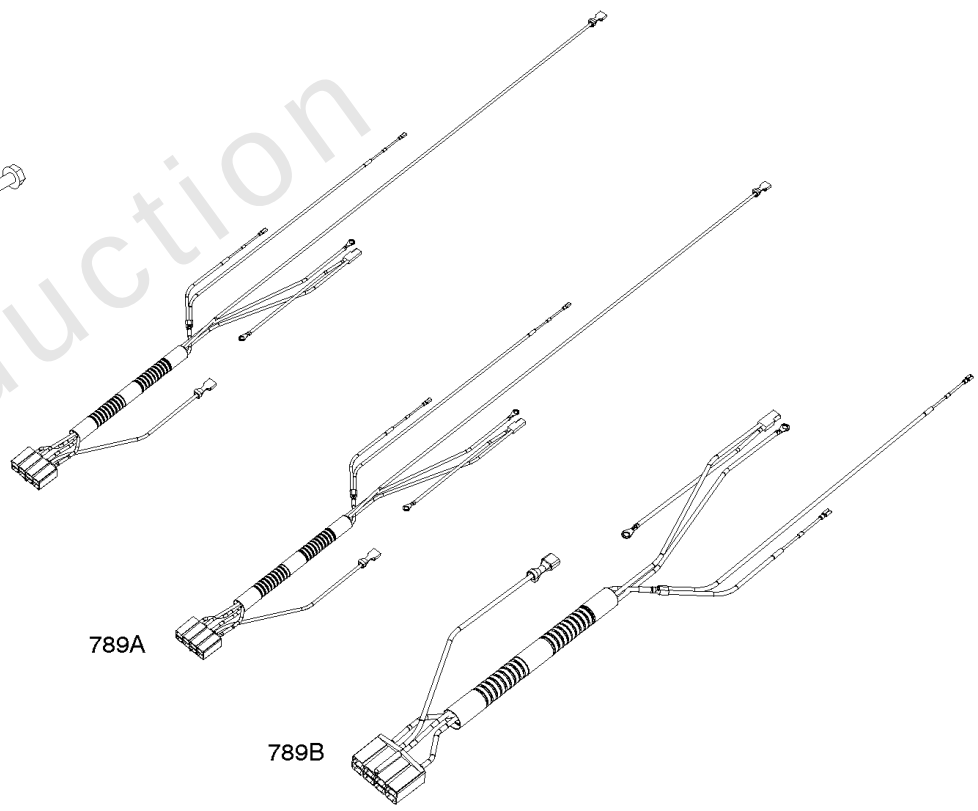

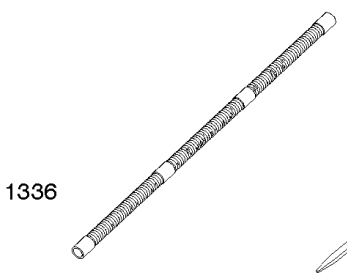

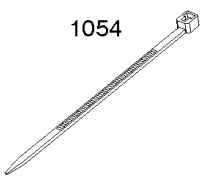

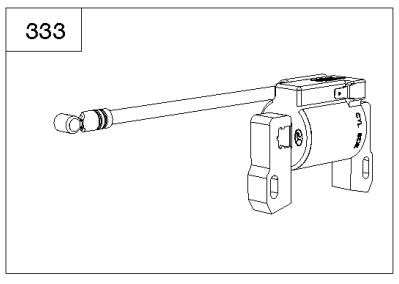

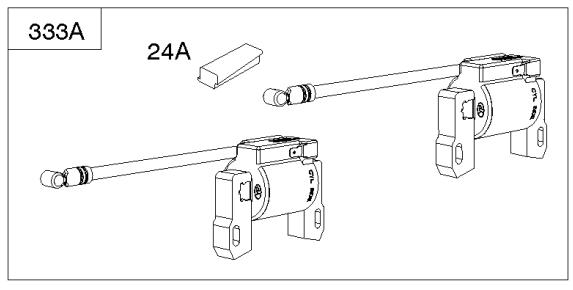

Not For Reproduction

Copyright © Briggs & Stratton. All Rights reserved

Alternator, Regulators, Starter Motor, Harness's

REF NO	PART NO	QTY	DESCRIPTION
24A	843837		KEY, Flywheel -(Offset Key) (Aluminum) -Used Before Code Date 06111500
309	845761		MOTOR, Starter
333	845126		ARMATURE, Magneto -Used After Code Date 06111400
333A	843860		ARMATURE, Magneto -(Includes Offset Flywheel Key) -Used Before Code Date 06111500
334	692066		SCREW -(Magneto Armature) (M4x23mm)
344	841233		SCREW -(Cable Clamp) (M6x10mm)
474	846882		ALTERNATOR
501	593843		REGULATOR
526	690717		SCREW -(Regulator) (M6x30mm)
529	690744		GROMMET -(Magneto Armature Wires)
578	846899		WIRE ASSEMBLY -(Regulator to Starter Motor) (Red) -Used After Code Date 15110100
587	846866		CLAMP, Cable
635	692076		BOOT, Spark Plug
697	690711		SCREW -(Starter Motor) (Drive Cap)
789A	809906		HARNESS, Wiring
893	845758		NUT -(Starter Solenoid)
920	846737		SOLENOID, Starter
1054	280275		TIE, Cable
1059A	698516		KIT, Screw/Washer -(Alternator)
1119	691552		SCREW -(Alternator) (M4x30mm)
1336	841015		SHIELD, Wire Protective

Not For Reproduction

Copyright © Briggs & Stratton. All Rights reserved

Camshaft, Crankcase Covers

Mfg. No: 543777-0110-E2

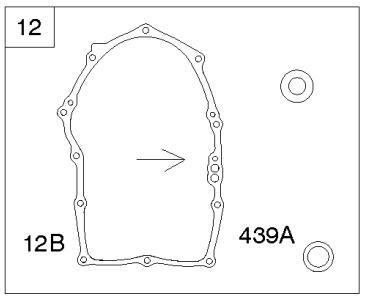

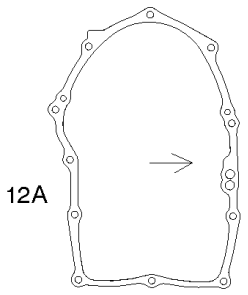

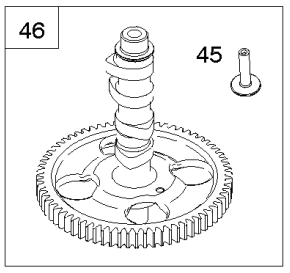

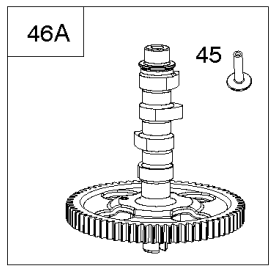

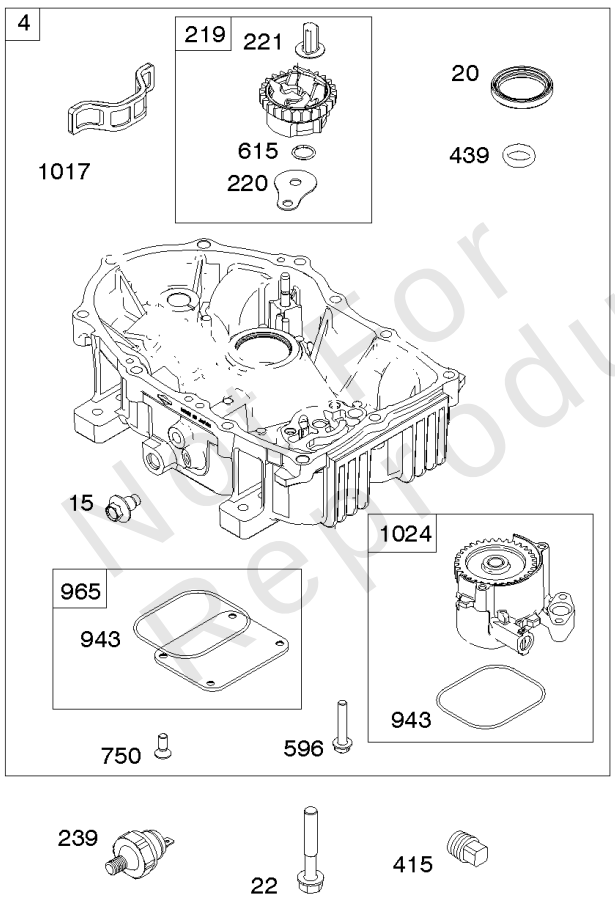

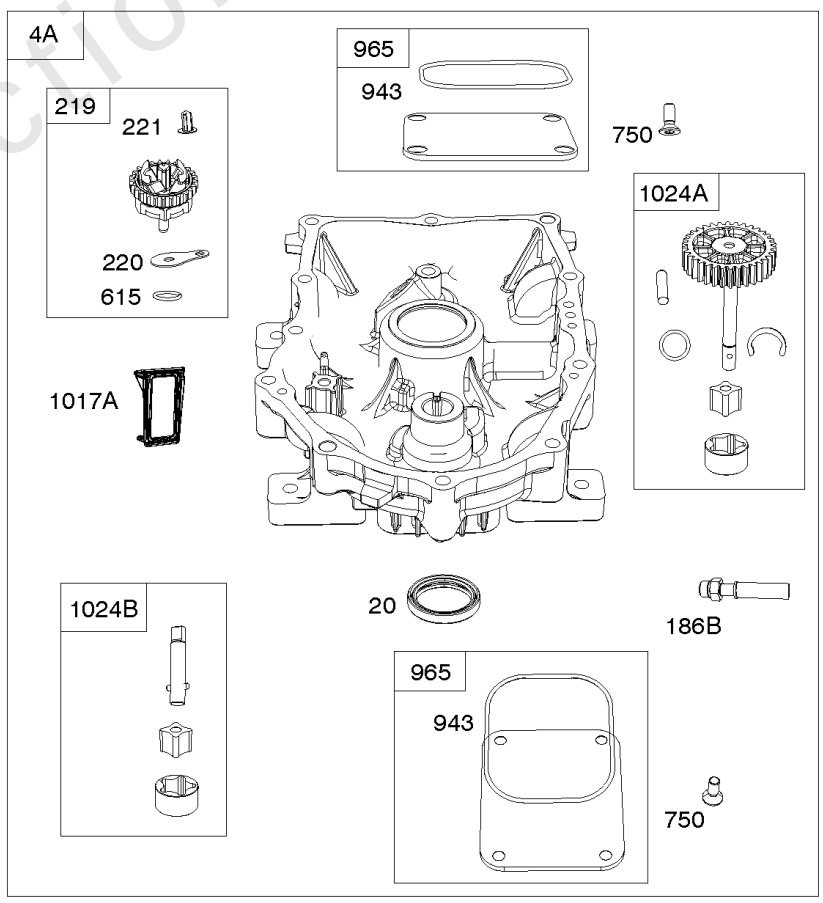

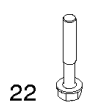

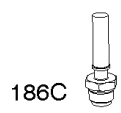

Not For Reproduction

Copyright © Briggs & Stratton. All Rights reserved

Camshaft, Crankcase Covers

REF NO	PART NO	QTY	DESCRIPTION
4	845176		SUMP, Engine
12	846037		GASKET, Crankcase -Used After Code Date 13072100
12A	844107		GASKET, Crankcase -Used Before Code Date 13072200
12B	843969		GASKET, Crankcase -Used After Code Date 13072100
15	807392		PLUG, Oil Drain
20	841596		SEAL, Oil -(PTO Side)
22	690676		SCREW -(Crankcase Cover/Sump) (M8x63mm) -Used After Code Date 10032300
22	807362		SCREW -(Crankcase Cover/Sump) (M8x50mm) -Used Before Code Date 10032400
45	809785		TAPPET, Valve
46	809879		CAMSHAFT
219	809426		GEAR, Governor
220	841608		WASHER -(Governor Gear)
221	841026		CUP, Governor
239	841281		SWITCH, Oil Pressure
415	794903		PLUG
439	692154		O-RING, Oil Gallery -(Crankcase Cover/Sump or Cylinder Assembly)
439A	846027		O-RING, Oil Gallery -(Crankcase Cover/Sump or Cylinder Assembly) -Used After Code Date 13072100
596	807385		SCREW -(Oil Pump)
615	698290		RETAINER, Governor Shaft -(Crankcase Cover/Sump)
750	842537		SCREW -(Oil Pump Cover)
943	842538		SEAL, O-Ring -(Oil Pump Cover)
965	842536		COVER, Oil Pump
1017	842535		SCREEN, Oil Pump
1024	-----		Pump-Oil -(NO LONGER AVAILABLE) -Used Before Code Date 13012800
1024	846026		PUMP, Oil -Used After Code Date 13012700

Not For Reproduction

Copyright © Briggs & Stratton. All Rights reserved

Carburetor Overhaul Kit, Engine/Valve Gasket Sets

Mfg. No: 543777-0110-E2

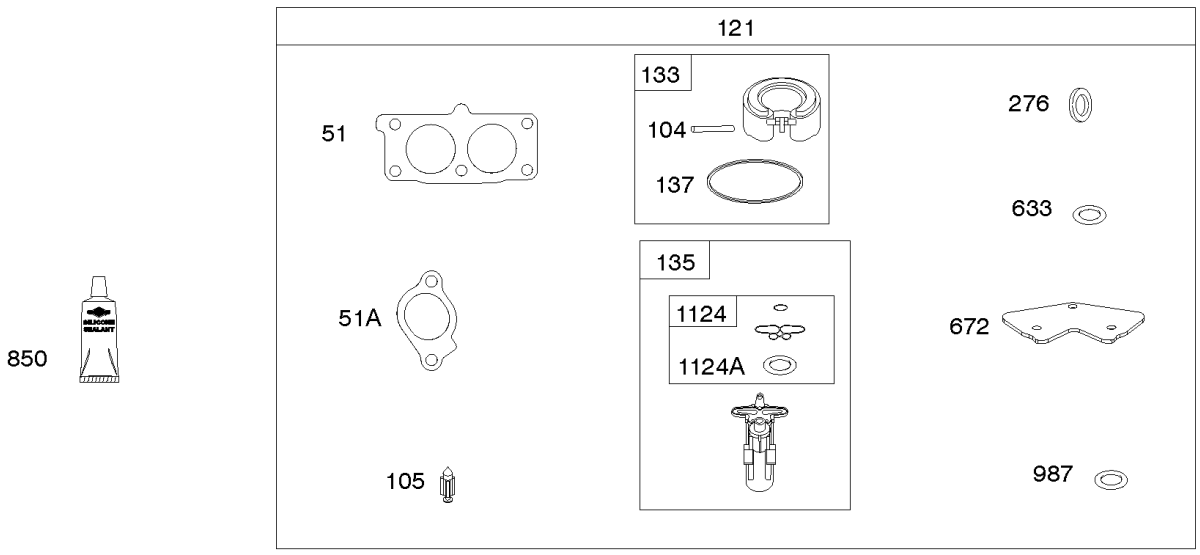

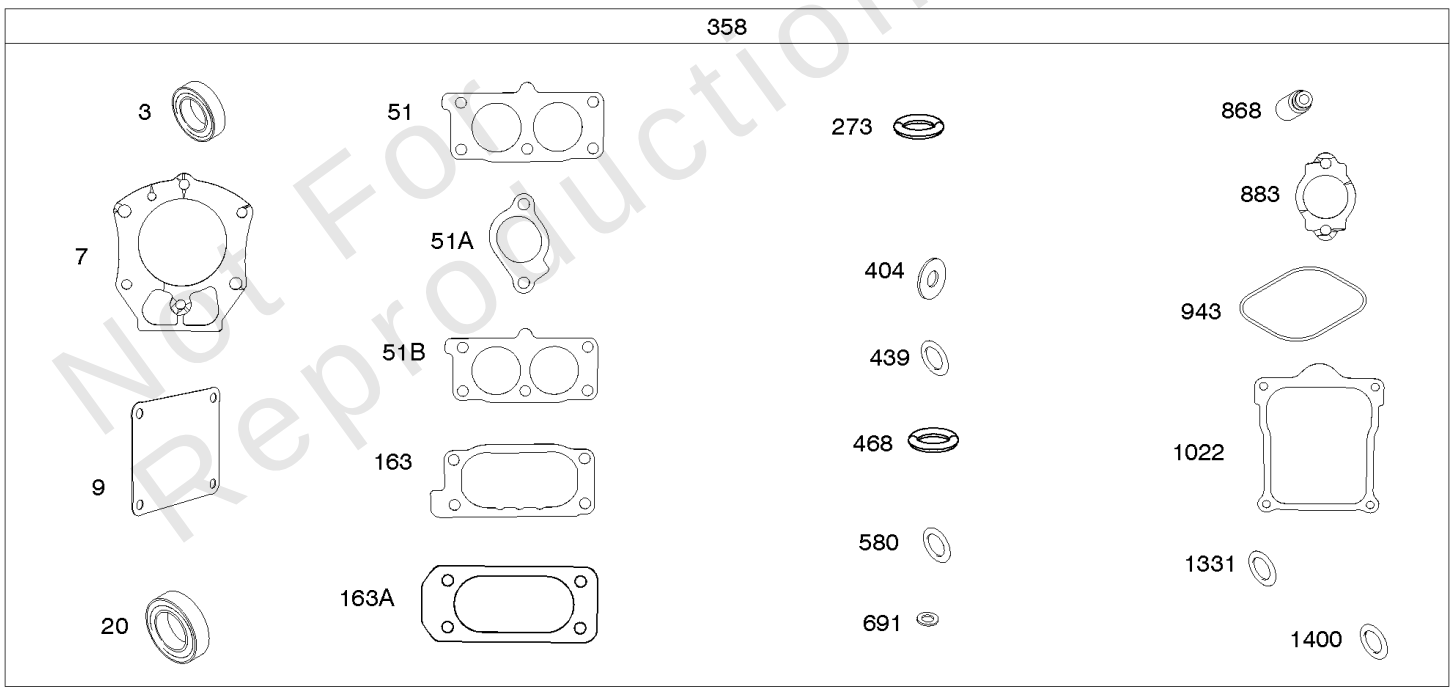

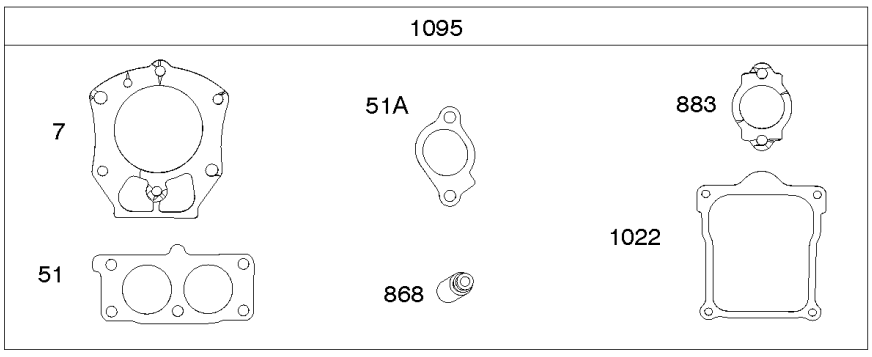

Not For Reproduction

Copyright © Briggs & Stratton. All Rights reserved

Carburetor Overhaul Kit, Engine/Valve Gasket Sets

REF NO	PART NO	QTY	DESCRIPTION
3	841596		SEAL, Oil -(Magneto Side)
7	809730		GASKET, Cylinder Head
9	842545		GASKET, Breather
20	841596		SEAL, Oil -(PTO Side)
51	809910		GASKET, Intake -(Intake Hole Diameter - 30mm)
51A	841592		GASKET, Intake
104	690882		PIN, Float Hinge
105	696136		VALVE, Float Needle
121	842697		KIT, Carburetor Overhaul
133	841545		FLOAT, Carburetor
135	842677		TUBE, Fuel Transfer
137	841651		GASKET, Float Bowl
163	807375		GASKET, Air Cleaner -(Carburetor Side)
273	690681		SEAL, O-Ring -(Oil Pump)
276	695410		WASHER, Sealing
358	841122		GASKET SET, Engine
404	809436		WASHER -(Governor Crank)
439	692154		O-RING, Oil Gallery -(Crankcase Cover/Sump or Cylinder Assembly)
468	690690		SEAL, O-Ring -(Oil Pump Screen)
580	809894		SEAL, O-Ring -(Oil Fill Cap)
633	690722		SEAL, Choke/Throttle Shaft -(Choke Shaft)
672	842696		GASKET, Carburetor Plate
691	809287		SEAL, Governor Shaft
868	691963		SEAL, Valve
883	809872		GASKET, Exhaust
943	842538		SEAL, O-Ring -(Oil Pump Cover)
987	808183		SEAL, Choke/Throttle Shaft
1022	809732		GASKET, Rocker Cover
1095	843713		GASKET SET, Valve
1124	842678		SEAL, O-Ring -(Fuel Transfer Tube)
1124A	841653		SEAL, O-Ring -(Fuel Transfer Tube)
1331	809894		SEAL, O-Ring -(Fuel Pump)
1400	809894		SEAL, O-Ring -(Fuel Pump Cover)

Not For Reproduction

Copyright © Briggs & Stratton. All Rights reserved

Carburetor, Fuel Supply

Mfg. No: 543777-0110-E2

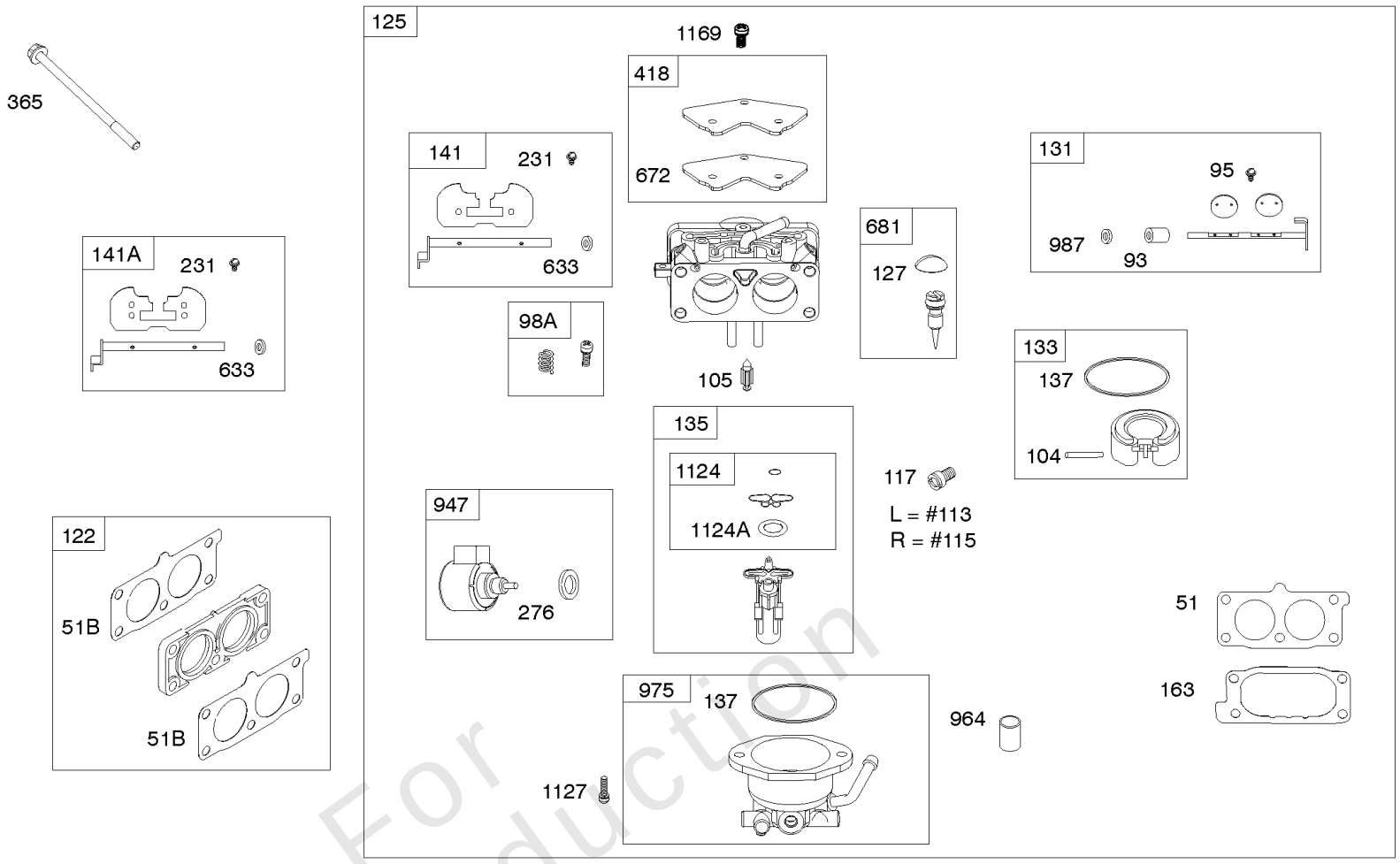

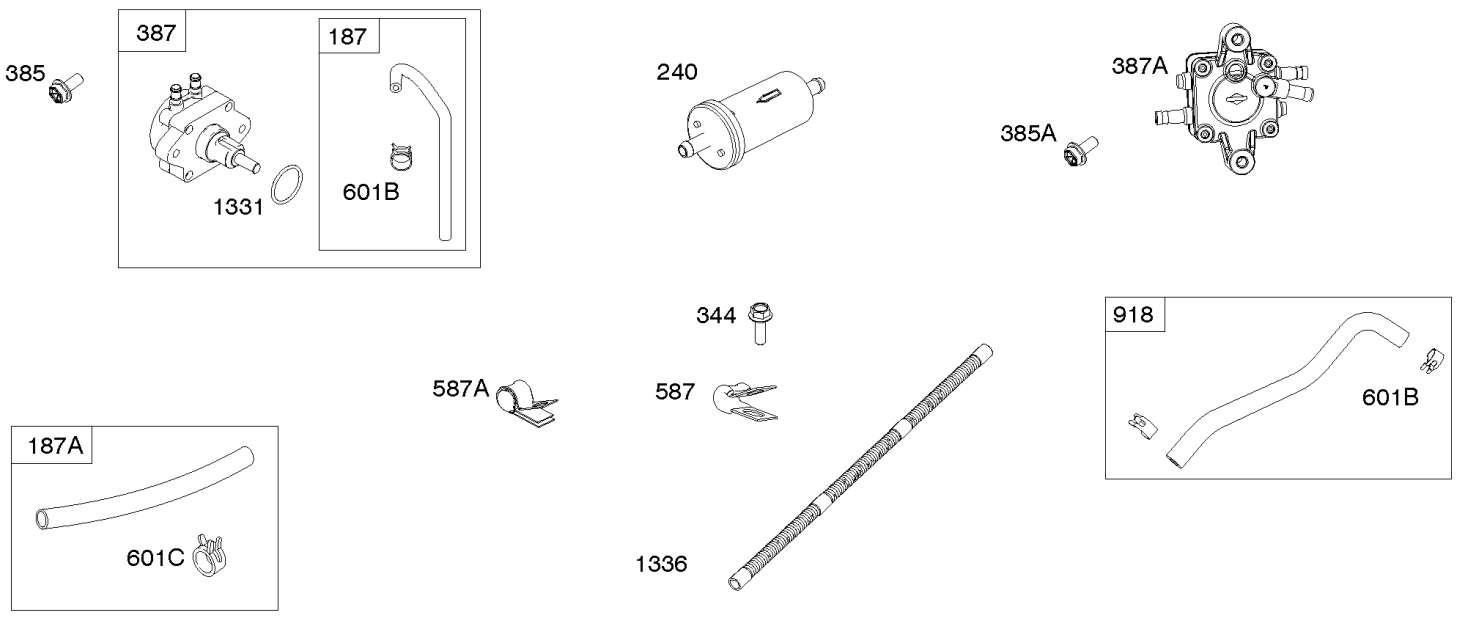

Not For Reproduction

Carburetor, Fuel Supply

REF NO	PART NO	QTY	DESCRIPTION
51	809910		GASKET, Intake -(Intake Hole Diameter - 30mm)
93	845864		BUSHING, Throttle Shaft
95	690718		SCREW -(Throttle Valve)
98A	808177		KIT, Idle Speed -(Carburetor)
104	690882		PIN, Float Hinge
105	696136		VALVE, Float Needle
117	791501		JET, Main -(Standard) (Left Jet) (#113)
117	796251		JET, Main -(Standard) (Right Jet) (#115)
117A	842081		JET, Main -(Standard) (Right Jet) (#120)
117A	699733		JET, Main -(Standard) (Left Jet) (#114)
118	699457		JET, Main -(High Altitude) (Right Jet) (#110)
118A	843099		JET, Main -(High Altitude) (Left Jet) (#108)
118A	699733		JET, Main -(High Altitude) (Right Jet) (#114)
122	846245		SPACER, Carburetor
125	845275		CARBURETOR
127	844590		PLUG, Welch
131	842694		KIT, Throttle Shaft
133	841545		FLOAT, Carburetor
135	842677		TUBE, Fuel Transfer
137	841651		GASKET, Float Bowl
141	844876		KIT, Choke Shaft
163	807375		GASKET, Air Cleaner -(Carburetor Side)
187	844083		LINE, Fuel -(Formed Hose)
187A	791745		LINE, Fuel -(23 Inches)(Cut To Required Length)
187A	791766		LINE, Fuel -(15 Inches Long)(Cut To Required Length)
231	690718		SCREW -(Choke Valve)
240	845125		FILTER, Fuel
276	695410		WASHER, Sealing
344	841233		SCREW -(Cable Clamp) (M6x10mm)
365	841853		SCREW -(Carburetor/Throttle Body)
385	809876		SCREW -(Fuel Pump) (M5x22mm)
385A	807084		SCREW -(Fuel Pump) (M6x14mm)
387	844088		PUMP, Fuel
387A	844527		PUMP, Fuel
418	844844		PLATE, Carburetor Cover
587	846866		CLAMP, Cable
587A	807116		CLAMP, Tube -(Purge Line Hose)

Not For Reproduction

Copyright © Briggs & Stratton. All Rights reserved

Carburetor, Fuel Supply

Mfg. No: 543777-0110-E2

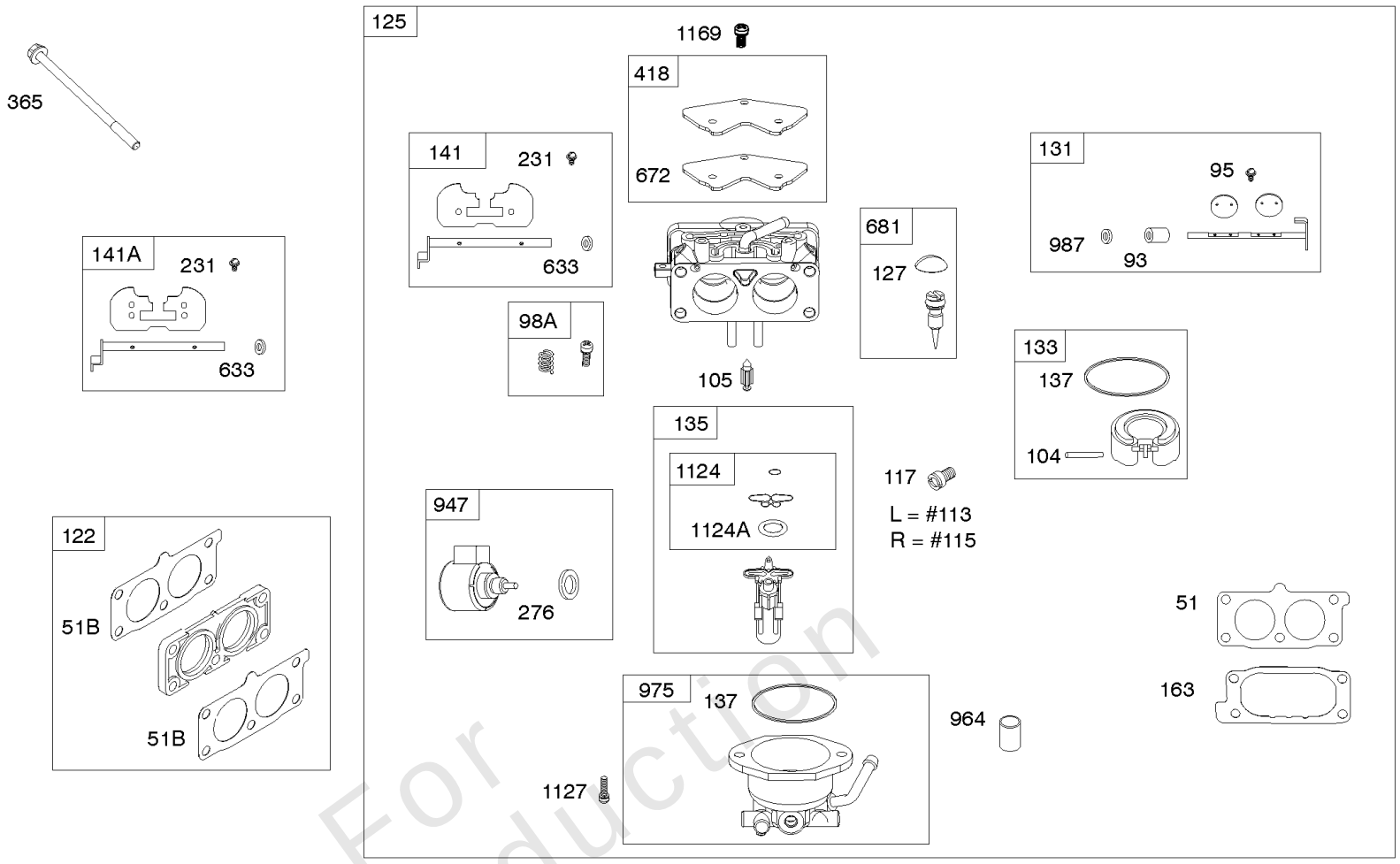

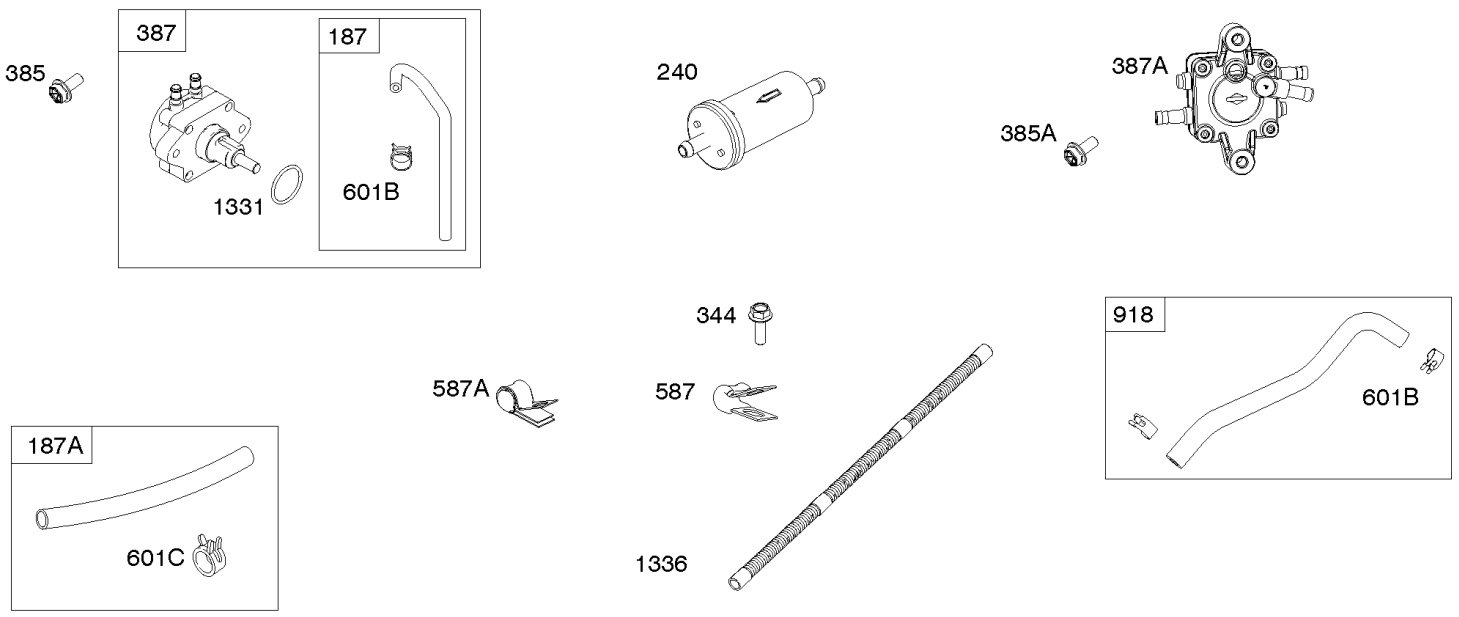

Not For Reproduction

Carburetor, Fuel Supply

REF NO	PART NO	QTY	DESCRIPTION
601B	691038		CLAMP, Hose -(Black)
601C	791850		CLAMP, Hose -(Green)
633	690722		SEAL, Choke/Throttle Shaft -(Choke Shaft)
672	842696		GASKET, Carburetor Plate
681	845290		KIT, Needle Valve
918	844526		HOSE, Vacuum
947	841546		SOLENOID, Fuel
964	807468		CAP, Carburetor -(Carburetor)
975	843551		BOWL, Float
987	808183		SEAL, Choke/Throttle Shaft
1124	842678		SEAL, O-Ring -(Fuel Transfer Tube)
1124A	841653		SEAL, O-Ring -(Fuel Transfer Tube)
1127	841621		SCREW -(Float Bowl to Carburetor Body)
1169	690990		SCREW -(Carburetor Cover Plate)
1331	809894		SEAL, O-Ring -(Fuel Pump)
1336	841015		SHIELD, Wire Protective

Not For Reproduction

Copyright © Briggs & Stratton. All Rights reserved

Control Brackets, Springs/Rods, Air Guides

Mfg. No: 543777-0110-E2

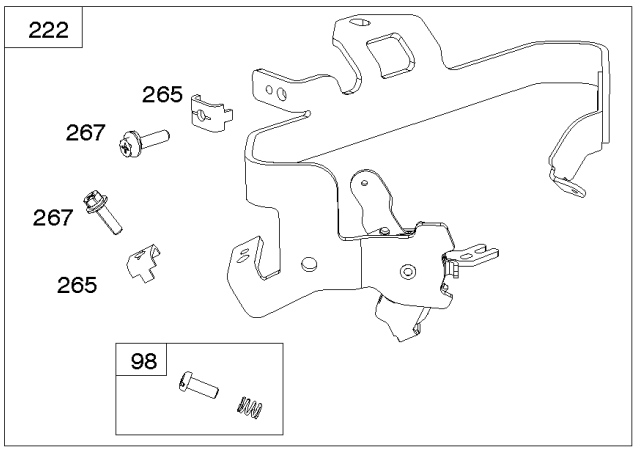

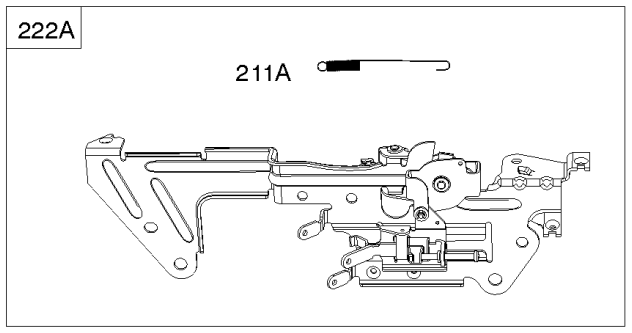

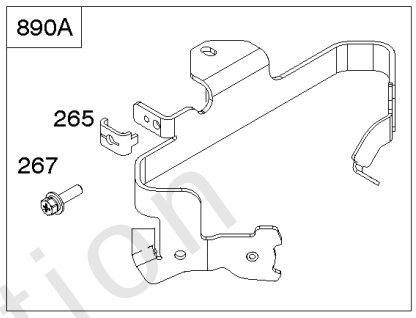

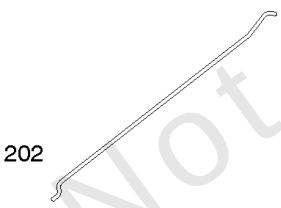

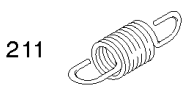

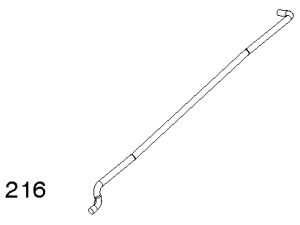

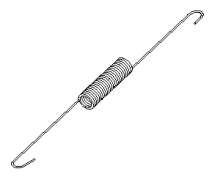

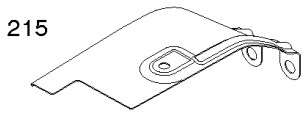

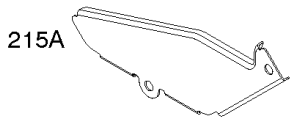

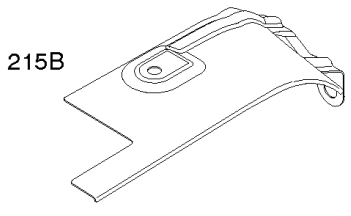

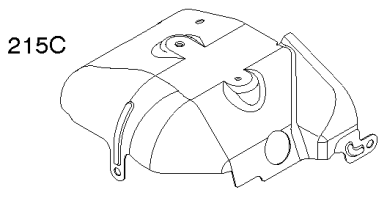

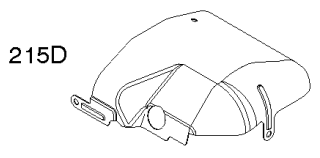

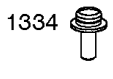

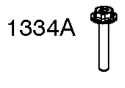

Not For Reproduction

Copyright © Briggs & Stratton. All Rights reserved

Control Brackets, Springs/Rods, Air Guides

REF NO	PART NO	QTY	DESCRIPTION
98	843550		KIT, Idle Speed -(Control Bracket)
188	807084		SCREW -(Control Bracket) (M6x14mm)
202	842533		LINK, Mechanical Governor
209	843561		SPRING, Governor -(Brown)
211A	690707		SPRING, Governed Idle -(Control Bracket) (White)
215	809728		GUIDE, Air -(Cylinder 1)
215A	809739		GUIDE, Air
215C	809738		GUIDE, Air -(Cylinder #1)
215D	809897		GUIDE, Air -(Cylinder #2)
215B	809737		GUIDE, Air -(Cylinder 2)
216	809788		LINK, Choke -Used Before Code Date 11030100
222A	841527		BRACKET, Control
232	843248		SPRING/LINK, Governor
265	691024		CLAMP, Casing
267	841552		SCREW -(Casing Clamp) (M5x20mm)
890A	843358		BRACKET, Support
1334	690677		SCREW -(Air Guide) (M4x12mm)
1334A	692062		SCREW -(Air Guide) (M8x18mm)
1334B	807084		SCREW -(Air Guide) (M6x14mm)
1334C	841233		SCREW -(Air Guide) (M6x10mm)

Not For Reproduction

Copyright © Briggs & Stratton. All Rights reserved

Cylinders, Crankshaft, Piston/Rings/Rods

Mfg. No: 543777-0110-E2

1036

1319

1330

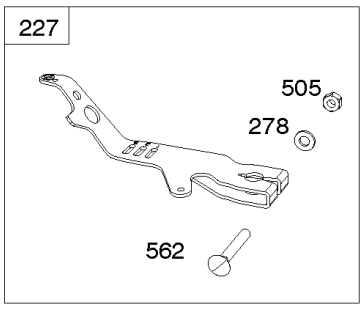

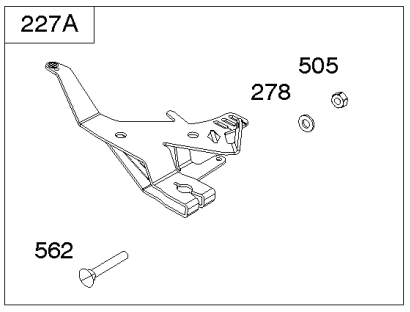

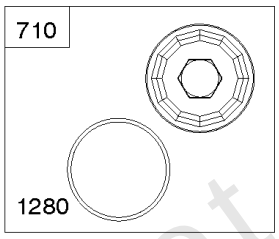

15A

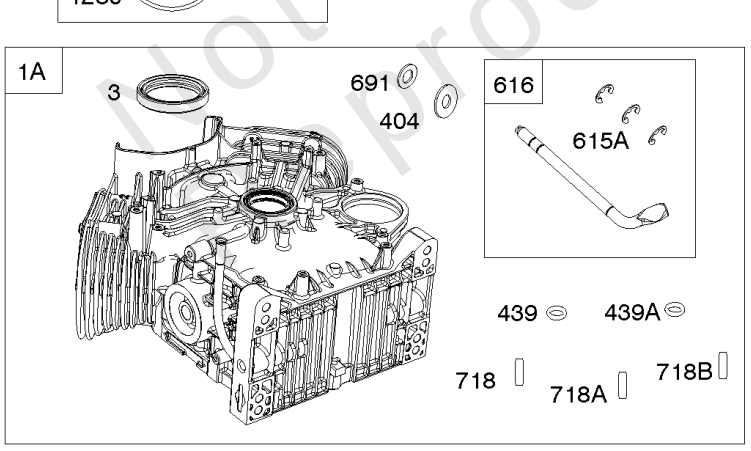

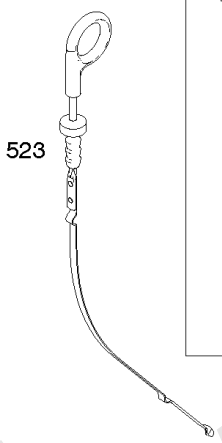

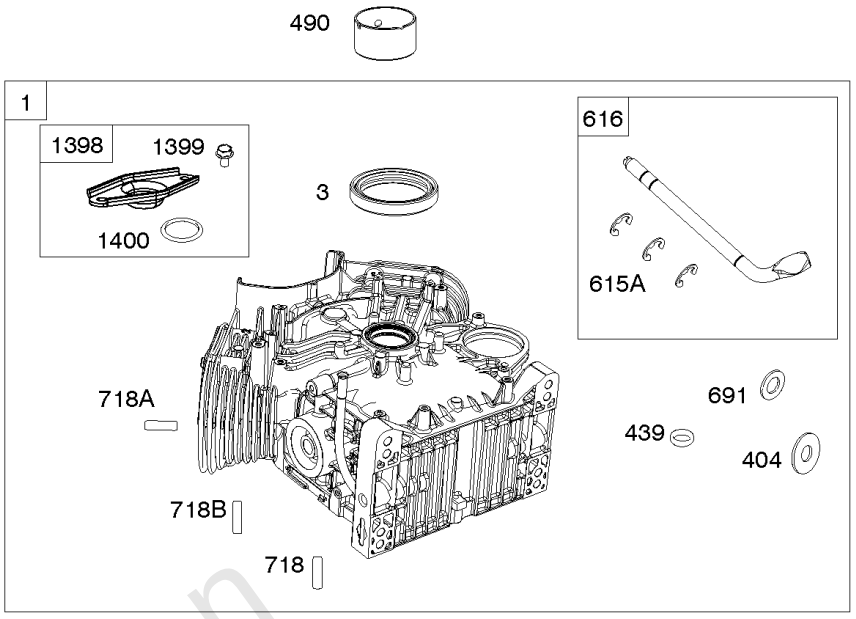

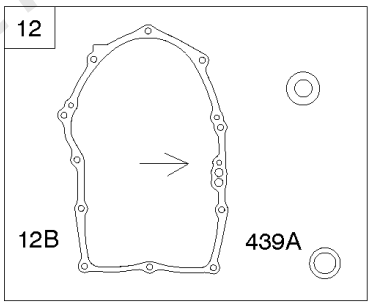

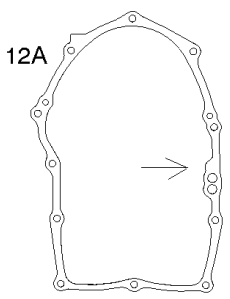

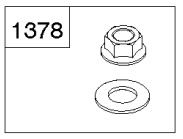

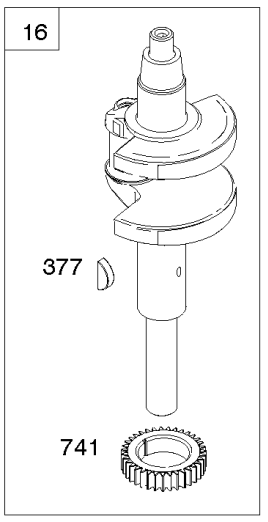

24

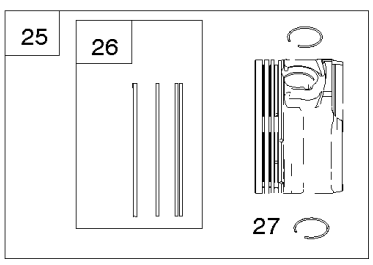

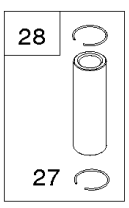

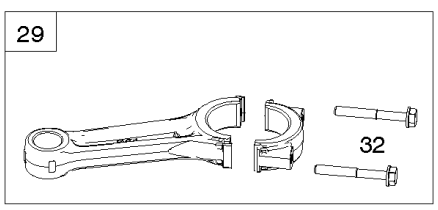

Not For Production

Copyright © Briggs & Stratton. All Rights reserved

Cylinders, Crankshaft, Piston/Rings/Rods

REF NO	PART NO	QTY	DESCRIPTION
1	845799		CYLINDER ASSEMBLY
3	841596		SEAL, Oil -(Magneto Side)
12	846037		GASKET, Crankcase -Used After Code Date 13072100
12A	844107		GASKET, Crankcase -Used Before Code Date 13072200
12B	843969		GASKET, Crankcase -Used After Code Date 13072100
16	842551		CRANKSHAFT
24	796335		KEY, Flywheel -(Steel) -Used After Code Date 07122700
24	222698S		KEY, Flywheel -(Aluminum) -Used Before Code Date 07122800
25	841931		PISTON ASSEMBLY -(.020 Oversize)
25	809790		PISTON ASSEMBLY -(Standard)
26	809972		SET, Ring -(Standard)
26	841932		SET, Ring -(.020 Oversize)
27	807351		LOCK, Piston Pin
28	807361		PIN, Piston
29	809275		ROD, Connecting
32	807363		SCREW -(Connecting Rod)
227A	809984		LEVER, Governor Control
278	842122		WASHER -(Governor Control Lever)
377	691639		KEY, Woodruff
404	809436		WASHER -(Governor Crank)
439	692154		O-RING, Oil Gallery -(Crankcase Cover/Sump or Cylinder Assembly)
439A	846027		O-RING, Oil Gallery -(Crankcase Cover/Sump or Cylinder Assembly) -Used After Code Date 13072100
490	843433		BEARING, Magneto Side
505	690238		NUT -(Governor Lever)
523	842542		DIPSTICK
562	843344		BOLT -(Governor Lever) (M6x40mm)
615A	809533		RETAINER, Governor Shaft -(Cylinder)
616	844180		CRANK, Governor
691	809287		SEAL, Governor Shaft
718	690959		PIN, Locating -(Cylinder)
718A	809508		PIN, Locating -(Cylinder Head)
718B	845925		PIN, Locating -(Cylinder)
741	809432		GEAR, Timing
1036	-----		Label-Emissions -(Available From A Briggs & Stratton Authorized Dealer)

Not For Reproduction

Copyright © Briggs & Stratton. All Rights reserved

Cylinders, Crankshaft, Piston/Rings/Rods

Mfg. No: 543777-0110-E2

1036

1319

1330

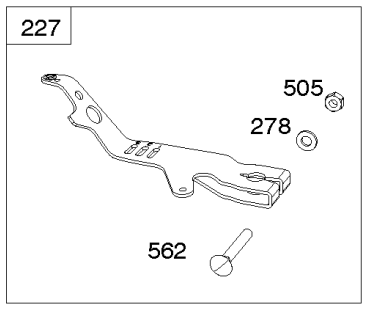

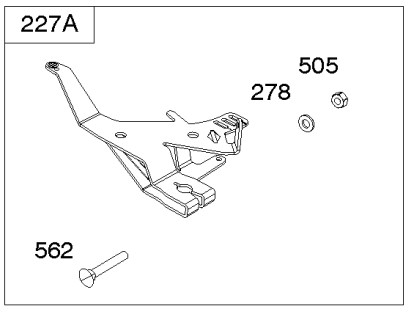

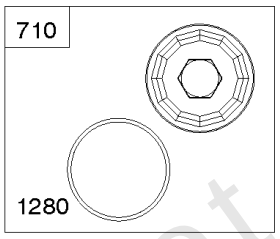

15A

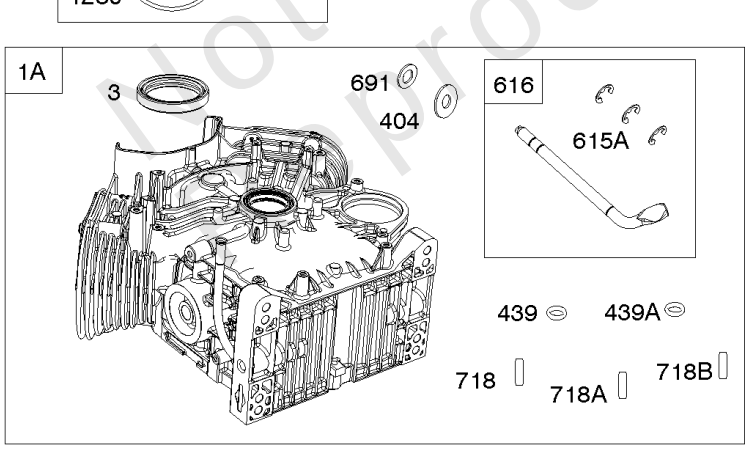

523

490

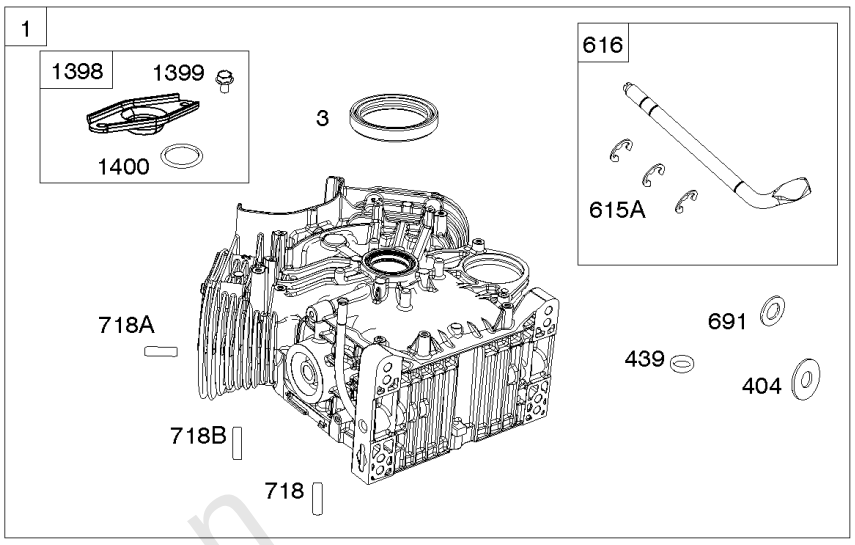

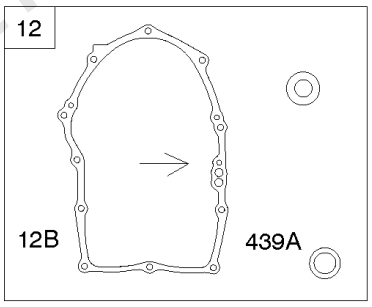

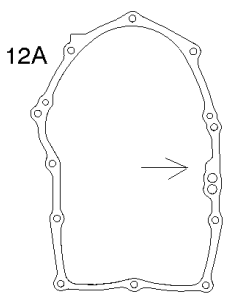

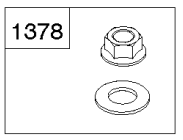

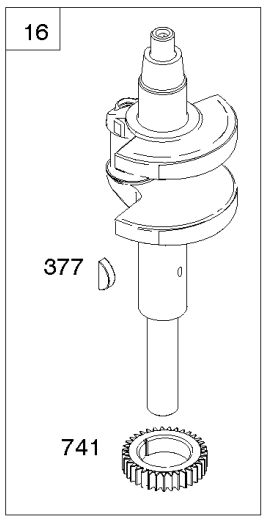

24

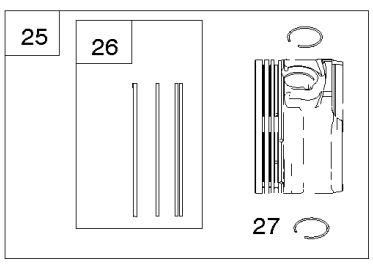

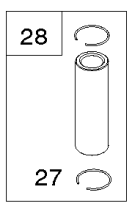

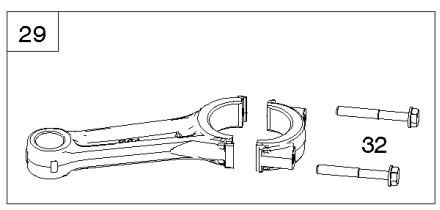

Not For Production

Cylinders, Crankshaft, Piston/Rings/Rods

REF NO	PART NO	QTY	DESCRIPTION
1319	794467		LABEL, Warning
1330	272144		MANUAL, Repair
1378	844795		SET, Washer/Nut -(Flywheel)
1398	842191		COVER, Fuel Pump
1399	690932		SCREW -(Fuel Pump Cover) (M5x10mm)
1400	809894		SEAL, O-Ring -(Fuel Pump Cover)

Not For Reproduction

Copyright © Briggs & Stratton. All Rights reserved

Flywheel, Flywheel Fans, Rotating Screen

Mfg. No: 543777-0110-E2

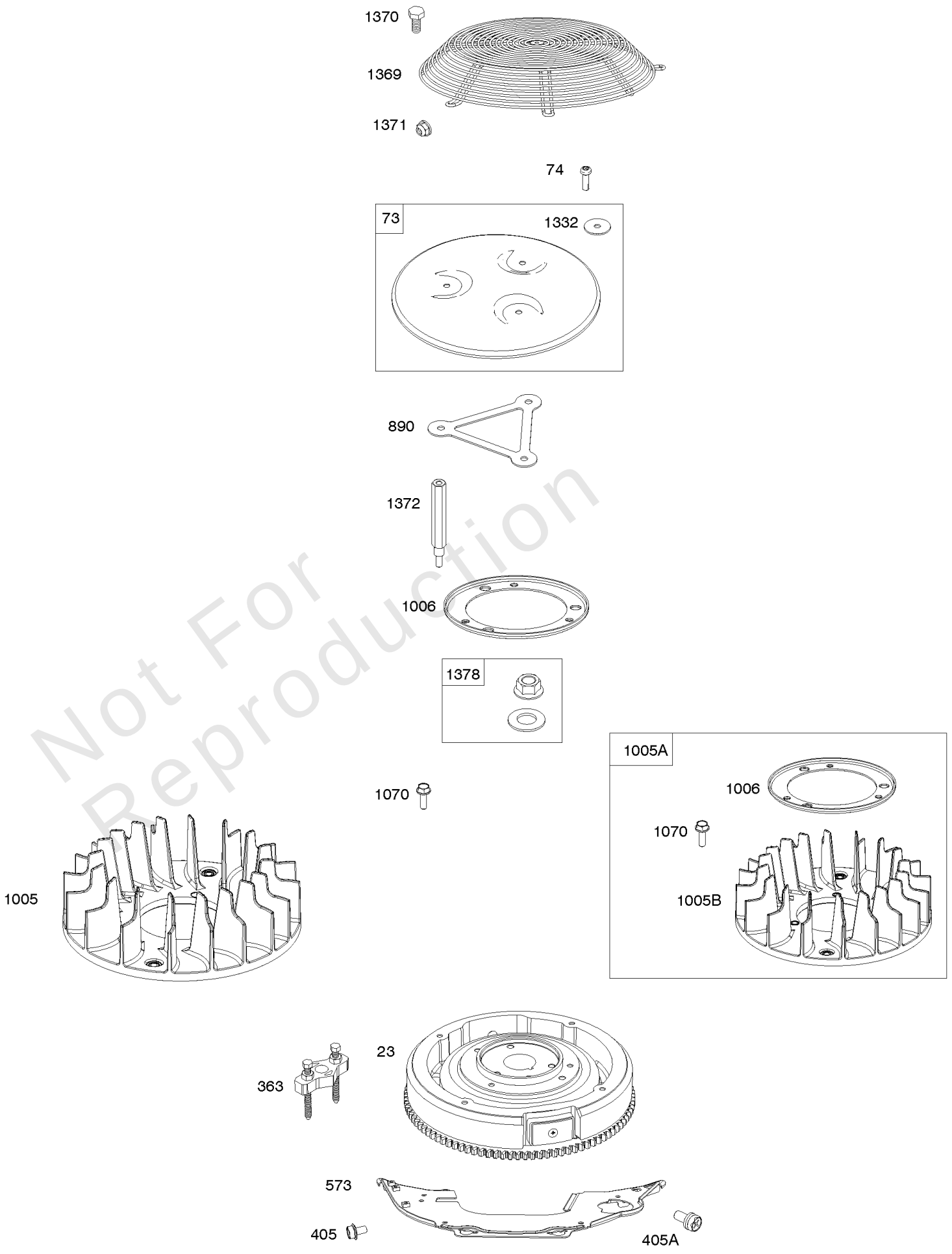

Not For Reproduction

Flywheel, Flywheel Fans, Rotating Screen

REF NO	PART NO	QTY	DESCRIPTION
23	844385		FLYWHEEL
73	841840		SCREEN, Rotating
74	809947		SCREW -(Rotating Screen)
363	19203		PULLER, Flywheel
405	841233		SCREW -(Back Plate) (M6x10mm)
405A	841735		SCREW -(Back Plate) (M6x14mm) -Used After Code Date 14121500
573	846840		PLATE, Back -(Without Weld Nuts)
890	809987		BRACKET, Support
1005A	847199		FAN, Flywheel
1005B	846995		FAN, Flywheel -Used After Code Date 15070600
1006	847198		RETAINER, Fan
1070	807435		SCREW -(Flywheel Fan) (M6x20mm)
1332	809948		WASHER -(Rotating Screen)
1369	842858		GUARD, Flywheel Fan
1370	841233		SCREW -(Flywheel Fan Guard) (M6x10mm)
1371	841537		NUT -(Flywheel Fan Guard)
1372	809946		STUD -(Rotating Screen)
1378	844795		SET, Washer/Nut -(Flywheel)

Not For Reproduction

Copyright © Briggs & Stratton. All Rights reserved

Intake Manifold, Intake Elbows, Muffler

Mfg. No: 543777-0110-E2

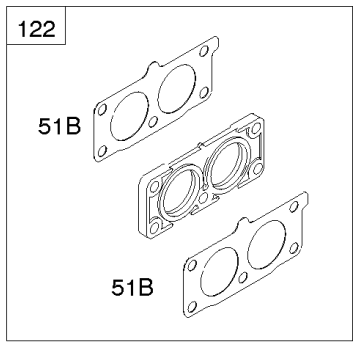

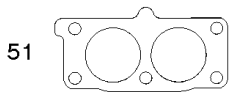

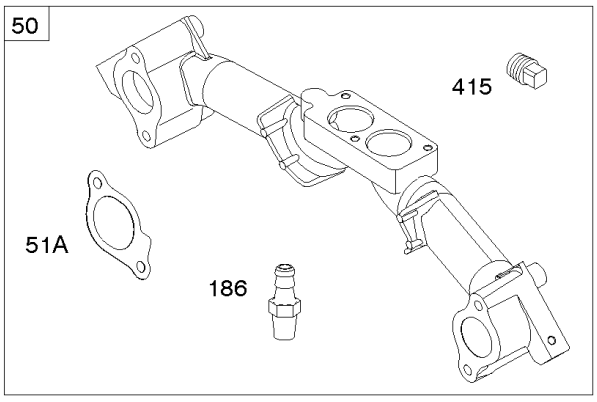

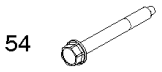

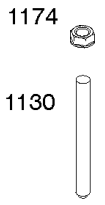

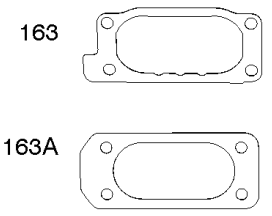

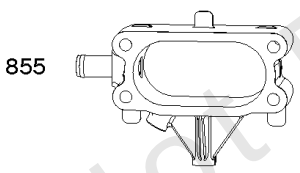

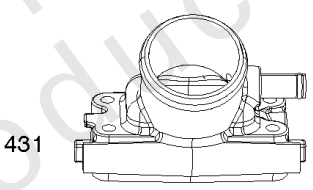

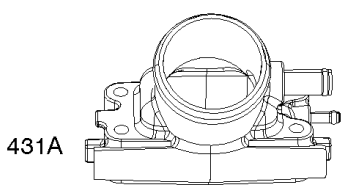

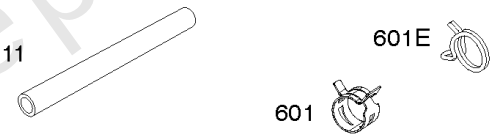

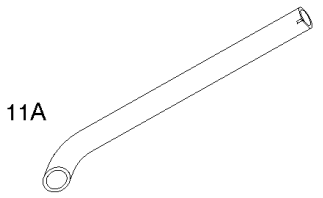

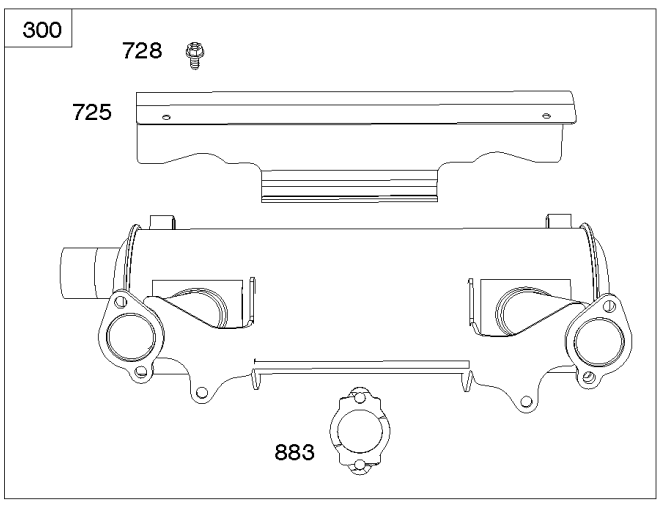

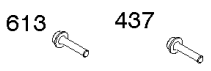

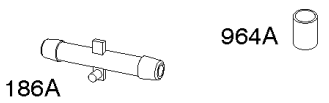

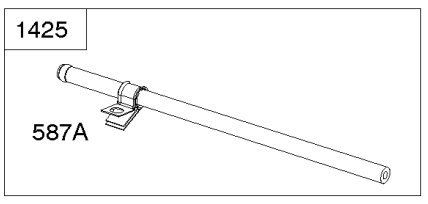

Not For Reproduction

Copyright © Briggs & Stratton. All Rights reserved

Intake Manifold, Intake Elbows, Muffler

REF NO	PART NO	QTY	DESCRIPTION
11	842541		TUBE, Breather
50	844341		MANIFOLD, Intake
51	809910		GASKET, Intake -(Intake Hole Diameter - 30mm)
51A	841592		GASKET, Intake
54	844656		SCREW -(Intake Manifold) (M8x69mm) -Used After Code Date 10092900
122	846245		SPACER, Carburetor
163	807375		GASKET, Air Cleaner -(Carburetor Side)
186	691764		CONNECTOR-HOSE -(Intake Manifold) (Sealant Patch)
186	844568		CONNECTOR, Hose -(Intake Manifold) (Without Sealant Patch)
186A	845121		CONNECTOR, Hose -(EVAP)
415	794903		PLUG
431	842528		ADAPTER, Air Cleaner
437	809743		SCREW -(Exhaust Manifold) (M8x25mm)
527	845268		CLAMP, Hose -(Purge Line Hose) -Used Before Code Date 10070700
587A	807116		CLAMP, Tube -(Purge Line Hose)
601	844405		CLAMP, Hose -(Breather Tube) -Used After Code Date 07121300
601E	841499		CLAMP, Hose -(Breather Tube) -Used Before Code Date 07121400
613	692062		SCREW -(Muffler) (M8x18mm)
725	841132		SHIELD, Heat
728	692067		SCREW -(Heat Shield)
883	809872		GASKET, Exhaust
964A	590799		CAP, Connector -(EVAP)
1130	841590		STUD -(Intake Manifold) -Used Before Code Date 10093000
1174	842067		NUT -(Intake Manifold) -Used Before Code Date 10093000
1425	844712		HOSE, Purge Line

Not For reproduction

Copyright © Briggs & Stratton. All Rights reserved

Oil Cooler, Blower Housings

Mfg. No: 543777-0110-E2

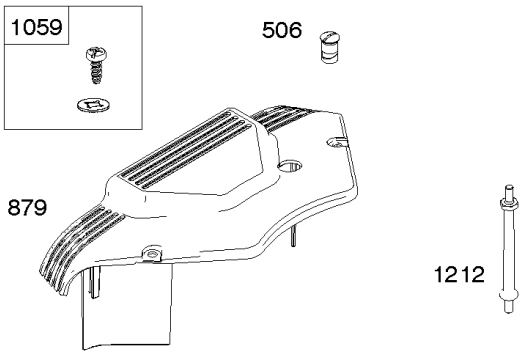

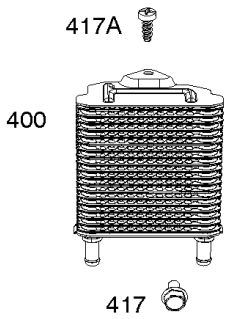

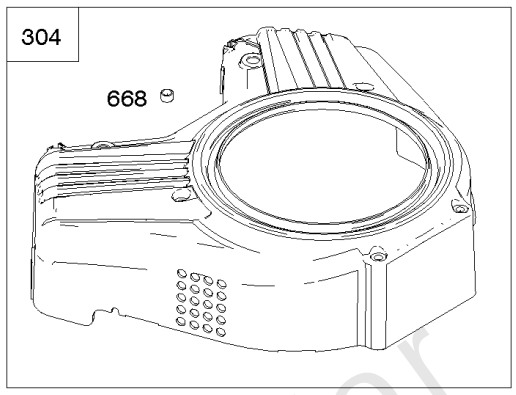

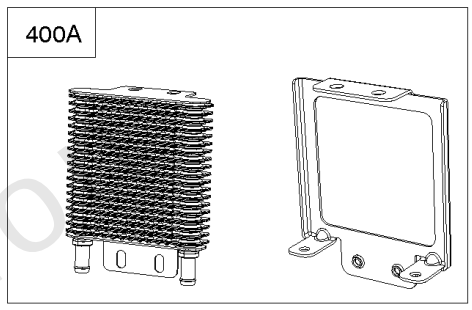

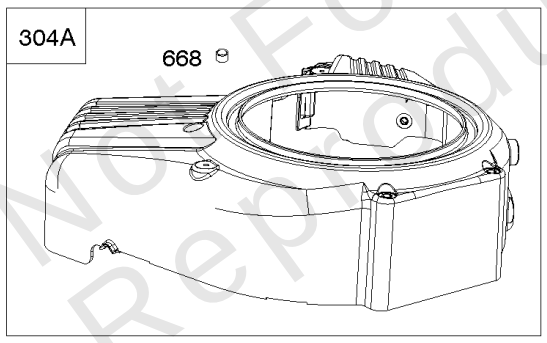

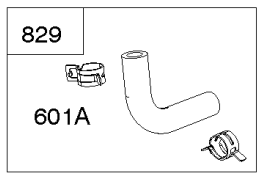

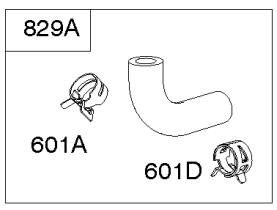

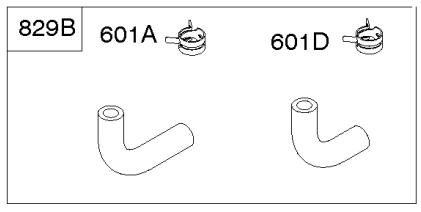

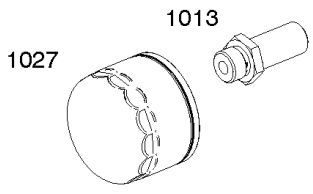

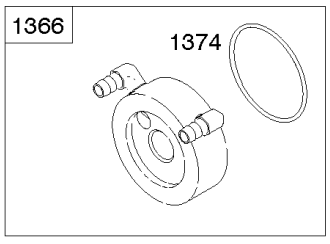

Not For Reproduction

Copyright © Briggs & Stratton. All Rights reserved

Oil Cooler, Blower Housings

REF NO	PART NO	QTY	DESCRIPTION
304	846481		HOUSING, Blower -(Oil Cooler)
400	846249		COOLER, Oil -Used After Code Date 14052200
400A	846489		COOLER, Oil -Used Before Code Date 14052300
417	841233		SCREW -(Oil Cooler) (Bottom) (M6x10mm)
417A	846250		SCREW -(Oil Cooler) (Top) (M6x16mm) -Used After Code Date 14050200
417B	843345		SCREW -(Oil Cooler) (M6x8mm) -Used Before Code Date 13072700
506	809957		SCREW -(Carburetor/EFI Cover) -Used Before Code Date 11041800
529	690744		GROMMET -(Magneto Armature Wires)
601A	841597		CLAMP, Hose -(Oil Cooler Hose)
601D	845209		CLAMP, Hose -(Oil Cooler Hose)
668	841974		SPACER -(Blower Housing)
829	846248		HOSE, Oil Cooler -Used After Code Date 15052200
829A	846247		HOSE, Oil Cooler -Used After Code Date 15052200
829B	846155		HOSE, Oil Cooler -Used Before Code Date 15052300
879	842526		COVER, Carburetor/EFI
1013	841602		NIPPLE, Oil Filter
1027	842921		FILTER, Oil
1059	845300		KIT, Screw/Washer -(Carburetor/EFI Cover) -Used After Code Date 11041700
1155	806647		WASHER -(Oil Cooler) -Used Before Code Date 13072700
1212	809958		STUD -(Blower Housing)
1366	841510		DIVERTER, Oil Cooler
1373	841233		SCREW -(Oil Cooler Bracket) -Used Before Code Date 13072600
1374	841506		SEAL, O-Ring -(Oil Cooler Diverter)

Not For Reproduction

Copyright © Briggs & Stratton. All Rights reserved

Replacement Engine - US & Canada

REF NO	PART NO	QTY	DESCRIPTION
	5437770010	1	Replacement Engine
	-----		Top No-Load Speed: 4000 -Trim: ALL

Not For Reproduction

Copyright © Briggs & Stratton. All Rights reserved

Rocker Arm Covers, Cylinder Heads

Mfg. No: 543777-0110-E2

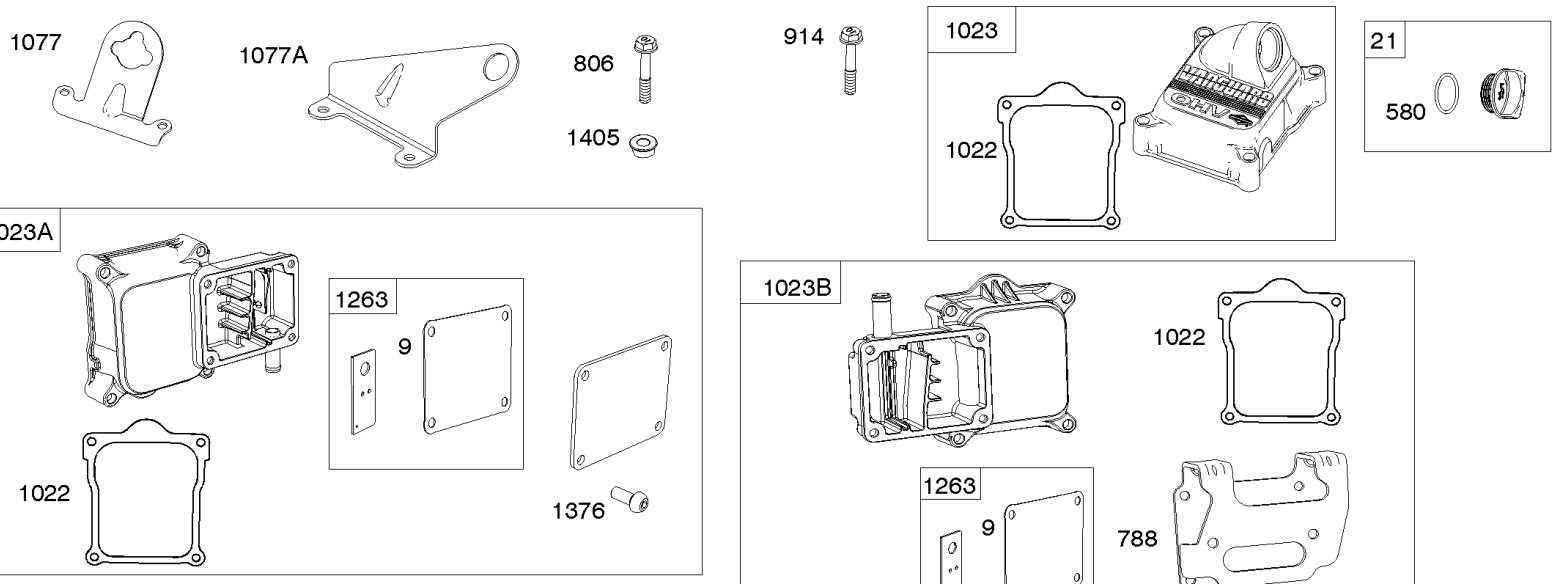

Not For Reproduction

Copyright © Briggs & Stratton. All Rights reserved

Rocker Arm Covers, Cylinder Heads

REF NO	PART NO	QTY	DESCRIPTION
5	845588		HEAD, Cylinder -(Cylinder 1)
5A	845590		HEAD, Cylinder -(Cylinder 2)
7	809730		GASKET, Cylinder Head
9	842545		GASKET, Breather
13	809784		SCREW -(Cylinder Head) (M9x70mm)
21	843464		CAP, Oil Fill
33	844787		VALVE, Exhaust
34	843730		VALVE, Intake
35	845589		SPRING, Valve -(Intake) (Intake) (Pink)
35A	809374		SPRING, Valve -(Intake) (Intake) (White)
36	845589		SPRING, Valve -(Exhaust) (Intake) (Pink)
36A	809374		SPRING, Valve -(Exhaust) (Intake) (White)
40	844788		RETAINER, Valve
42	807683		KEEPER, Valve
45	809785		TAPPET, Valve
51A	841592		GASKET, Intake
192	690083		ADJUSTER. Rocker Arm
337	491055S		PLUG, Spark
337	84007216		PLUG, SPARK -(China Only)
383	19576S		WRENCH, Spark Plug
580	809894		SEAL, O-Ring -(Oil Fill Cap)
628	842547		SCREW -(Fuel Pump Bracket)
635	692076		BOOT, Spark Plug
788	844530		BRACKET, Fuel Pump
798	691492		SCREW -(Rocker Arm)
806	807357		SCREW -(Lifting Bracket)
868	691963		SEAL, Valve
871	692057		BUSHING, Valve Guide
883	809872		GASKET, Exhaust
914	807357		SCREW -(Rocker Cover) (M6x40mm)
1022	809732		GASKET, Rocker Cover
1023	842540		COVER, Rocker -(Cylinder 2)
1023A	842543		COVER, Rocker -(Cylinder 1)
1026	809783		ROD, Push -(Intake and Exhaust)
1029	690972		ARM, Rocker
1029A	807323		ARM, Rocker
1077	809729		BRACKET, Lifting
1077A	842616		BRACKET, Lifting
1100	791959		PIVOT, Rocker Arm
1263	842544		REED, Breather

Not For Reproduction

Copyright © Briggs & Stratton. All Rights reserved

Rocker Arm Covers, Cylinder Heads

Mfg. No: 543777-0110-E2

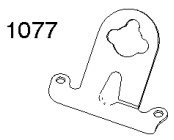

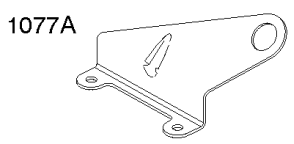

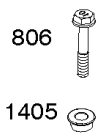

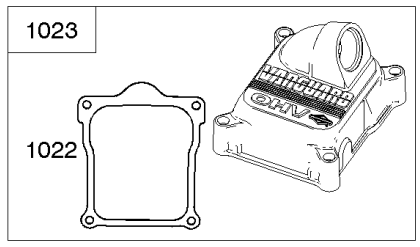

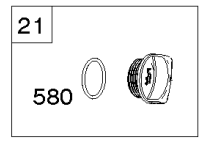

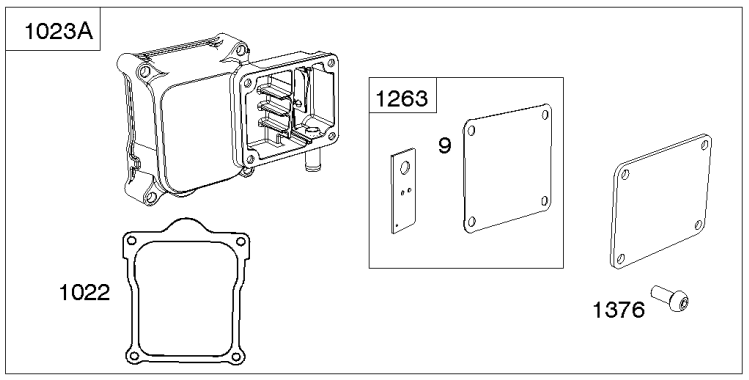

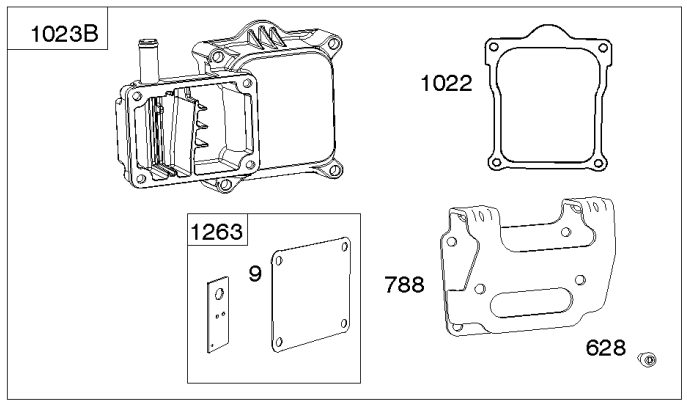

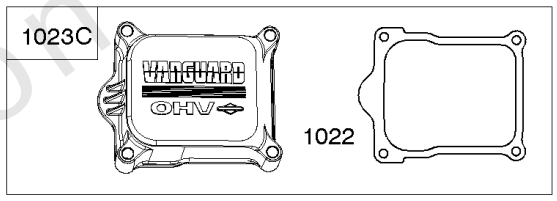

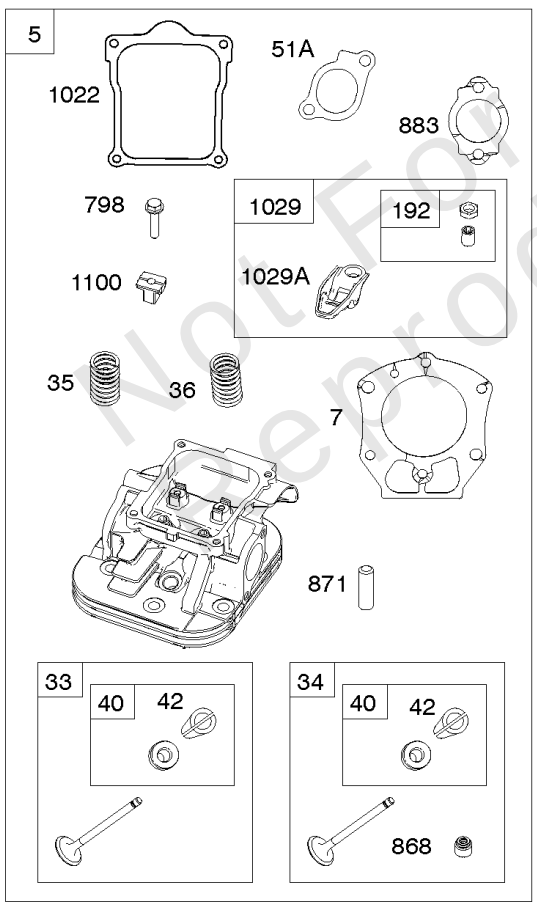

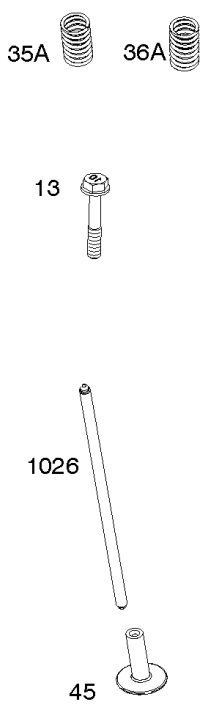

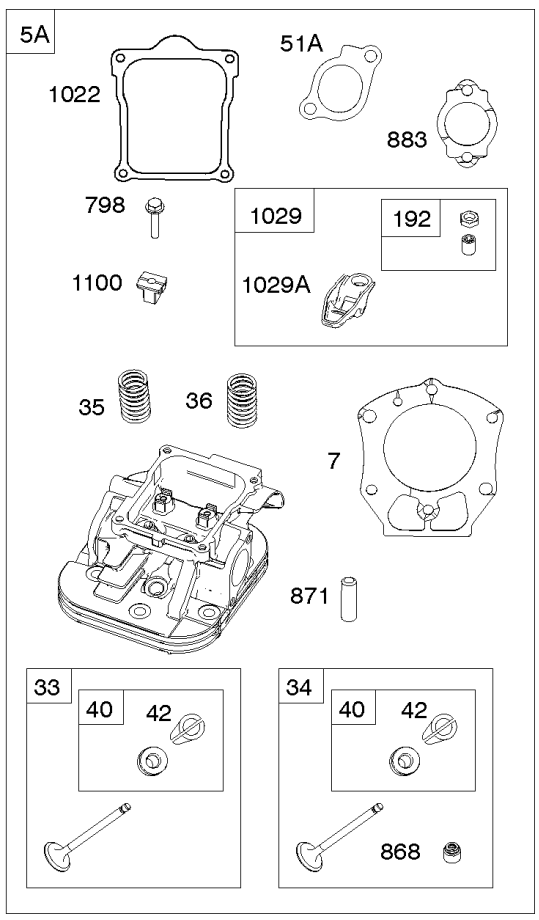

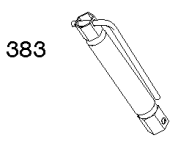

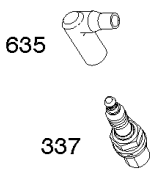

Not For Reproduction

Copyright © Briggs & Stratton. All Rights reserved

Rocker Arm Covers, Cylinder Heads

REF NO	PART NO	QTY	DESCRIPTION
1376	842547		SCREW -(Breather Reed Cover) (M6x14mm)
1405	690941		NUT -(Lifting Bracket) -Used Before Code Date 15020100

Not For Reproduction

Copyright © Briggs & Stratton. All Rights reserved

Model 54-61 Engine Accessories Catalog

Not For Reproduction

Copyright © Briggs & Stratton. All Rights reserved

18-Apr-2024

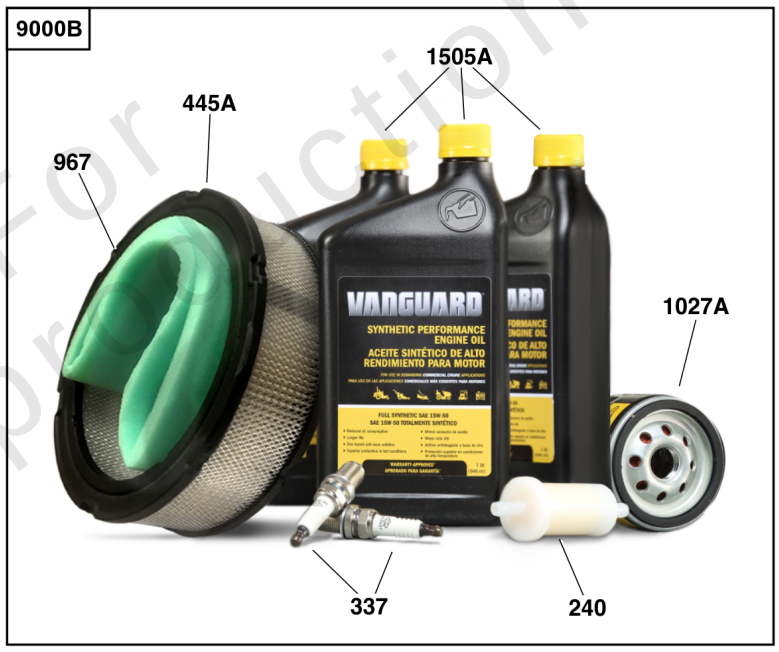

Not For Reproduction

Copyright © Briggs & Stratton. All Rights reserved

Maintenance Kits

REF NO	PART NO	QTY	DESCRIPTION
9000	84002318		KIT, Maintenance -(Oil Guard™ Engines)
9000A	84002315		KIT, Maintenance -(Non-Oil Guard™ Engines)
9000B	84004936		KIT, Maintenance -(Non-Oil Guard™ Engines) (20 - 40 HP)
240	845125	1	FILTER, Fuel
337	491055S	2	PLUG, Spark
445	841497	1	FILTER, A/C Cartridge -"Professional / PXi" & "Commercial / CXi".
445A	692519	1	FILTER, A/C Cartridge -"Professional / PXi" & "Commercial / CXi".
967	692520	1	FILTER, Pre Cleaner
1027	595930	1	FILTER, Oil -(Oil Guard™)
1027A	842921	1	FILTER, Oil -(Vanguard®)
1505	100170		OIL-5QT VANGUARD (CASE) -(5 qt Bottle)
1505A	100169		OIL-1QT VANGUARD (CASE) -(1 qt Bottle)

Not For Reproduction

Copyright © Briggs & Stratton. All Rights reserved

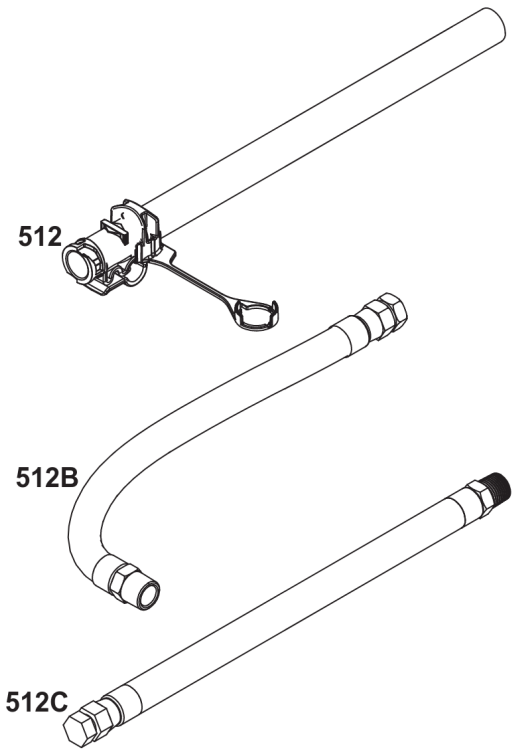

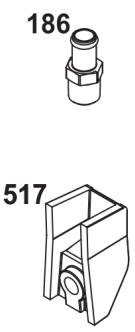

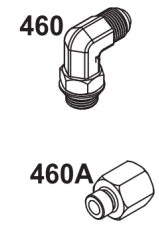

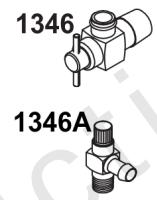

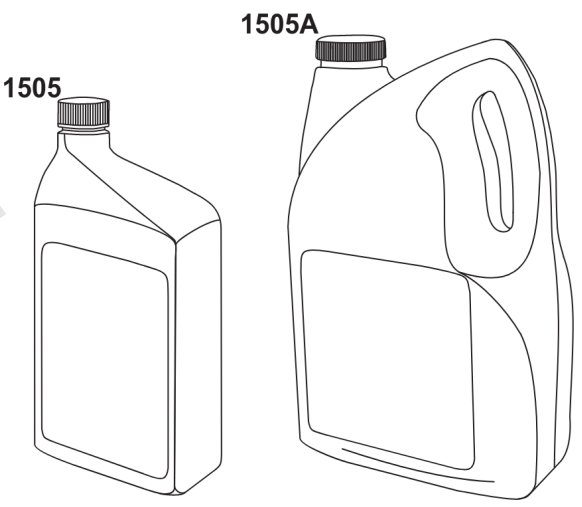

Not For Reproduction

Copyright © Briggs & Stratton. All Rights reserved

Lubrication

REF NO	PART NO	QTY	DESCRIPTION
186	796532	1	CONNECTOR, Hose -(Threaded Engine Block Connector for EZ-Oil Drain Hose)(Order hose separate)
239	690233	1	SWITCH, Oil Pressure -(2-4 PSI Normally-Closed Switch)
239A	491657S	1	SWITCH, Oil Pressure -(3-5 PSI Normally-Closed Switch)
239B	841281	1	SWITCH, Oil Pressure -(7-10 PSI Normally-Closed Switch)
239C	694115	1	SWITCH, Oil Pressure -(9-13 PSI Normally-Closed Switch)
239D	697049	1	SWITCH, Oil Pressure -(3-6 PSI Normally-Open Switch)
460	1761386YP	1	CONNECTOR, Filter Adapter -(Oil Drain Valve) (Fitting M14, 90 Degree 9/16 JIC)
460A	5100366SM	1	METRIC ADAPTER, M14-1 -(Threaded engine block adapter M14 to 3/8 for EZ-Oil Drain connector) (order 796532 separate)
512	594200	1	HOSE, Oil Drain -(EZ-Oil Drain Hose, 10.5") (Order threaded engine block connector separate)
512	593635	1	HOSE, Oil Drain -(EZ-Oil Drain Hose, 13.75") (Order threaded engine block connector separate)
512B	1723165SM	1	HOSE, Oil Drain, 10-1/2" Long, 3/8-18 Fittings -(10.5")
512C	5048681SM	1	HOSE, OIL DRAIN -(12.5")
517	593633	1	RETAINER, Oil Drain
1346	844802	1	VALVE, Oil Drain Shut Off
1346A	492031	1	VALVE, Oil Drain Shut Off
1505	100169		OIL-1QT VANGUARD (CASE) -(1 qt. Bottle)
1505A	100170		OIL-5QT VANGUARD (CASE) -(5 qt. Bottle)

Not For Reproduction

Copyright © Briggs & Stratton. All Rights reserved

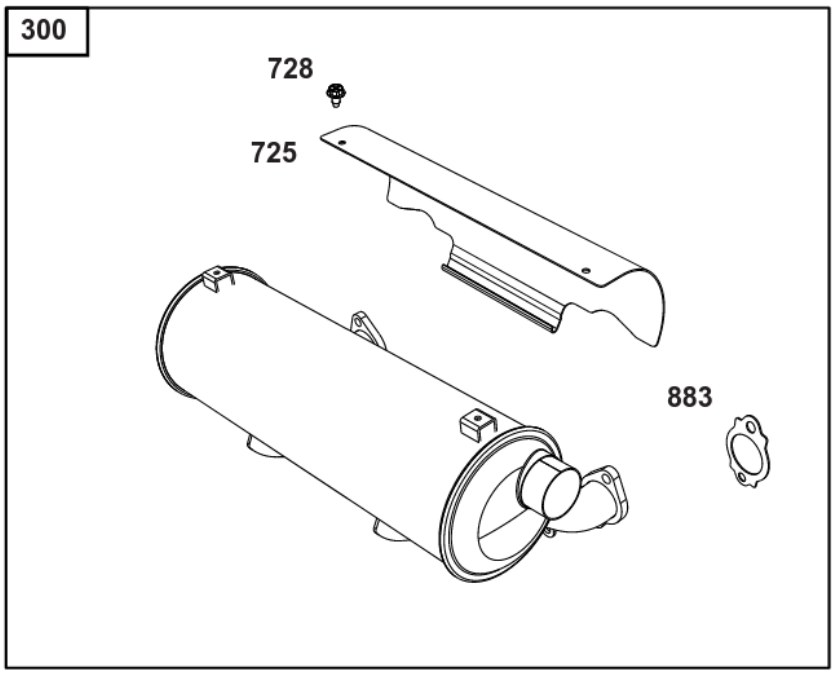

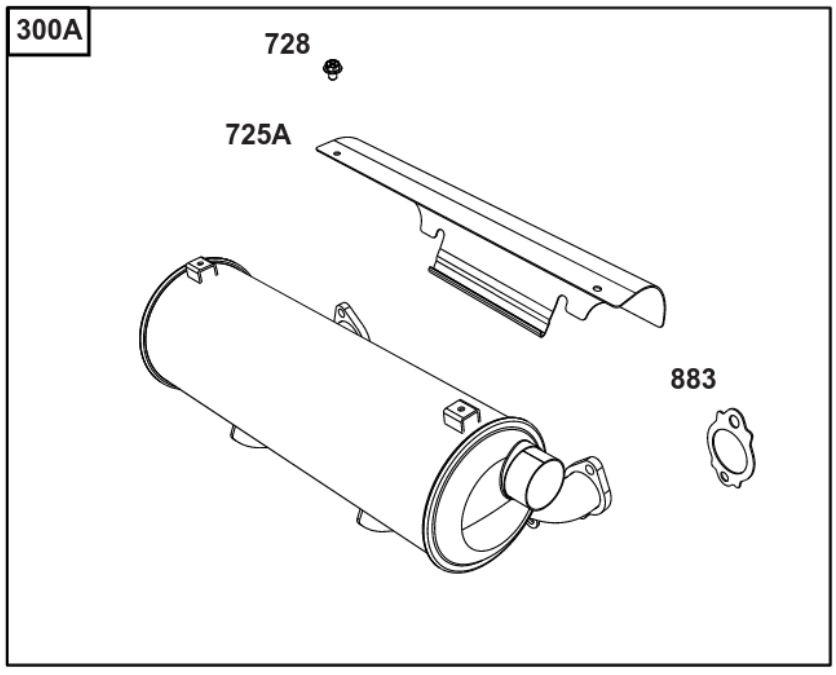

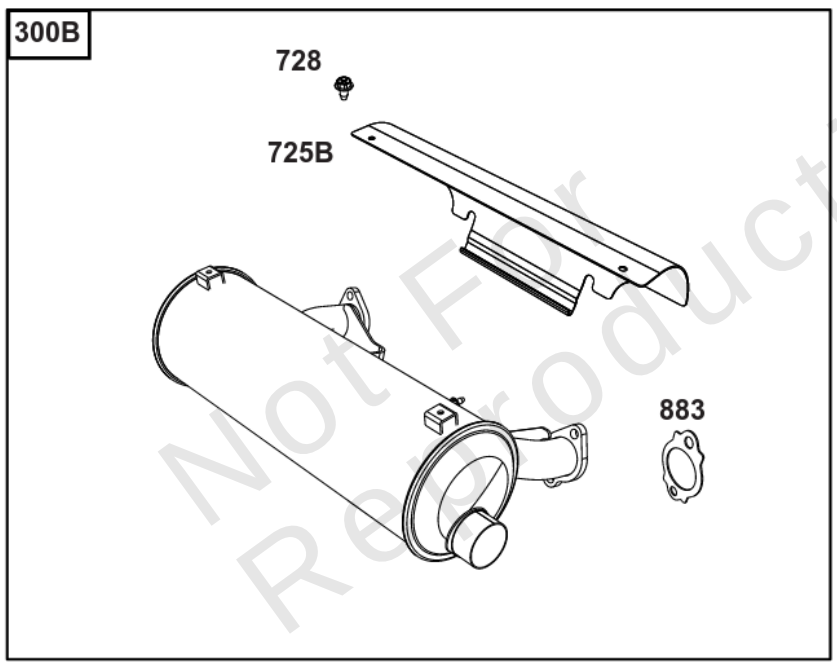

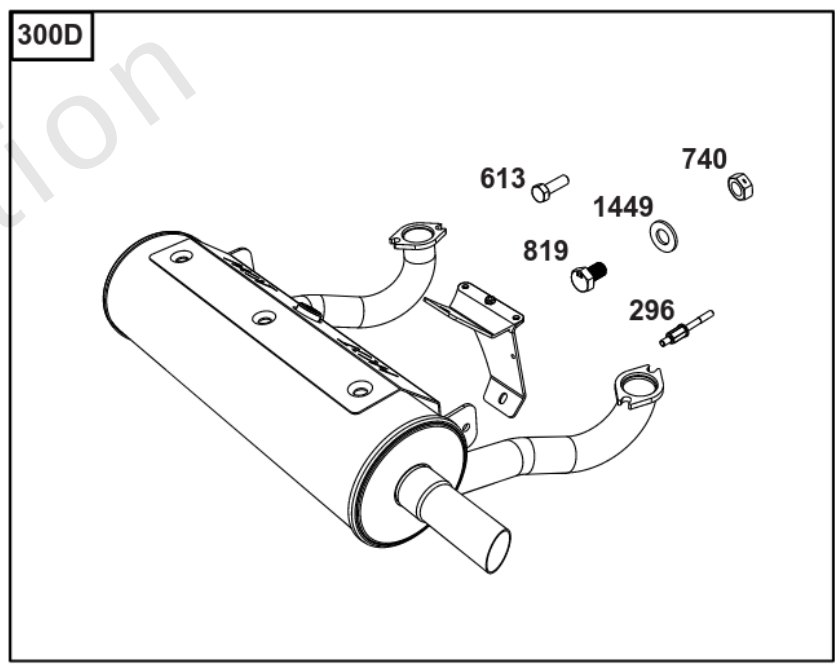

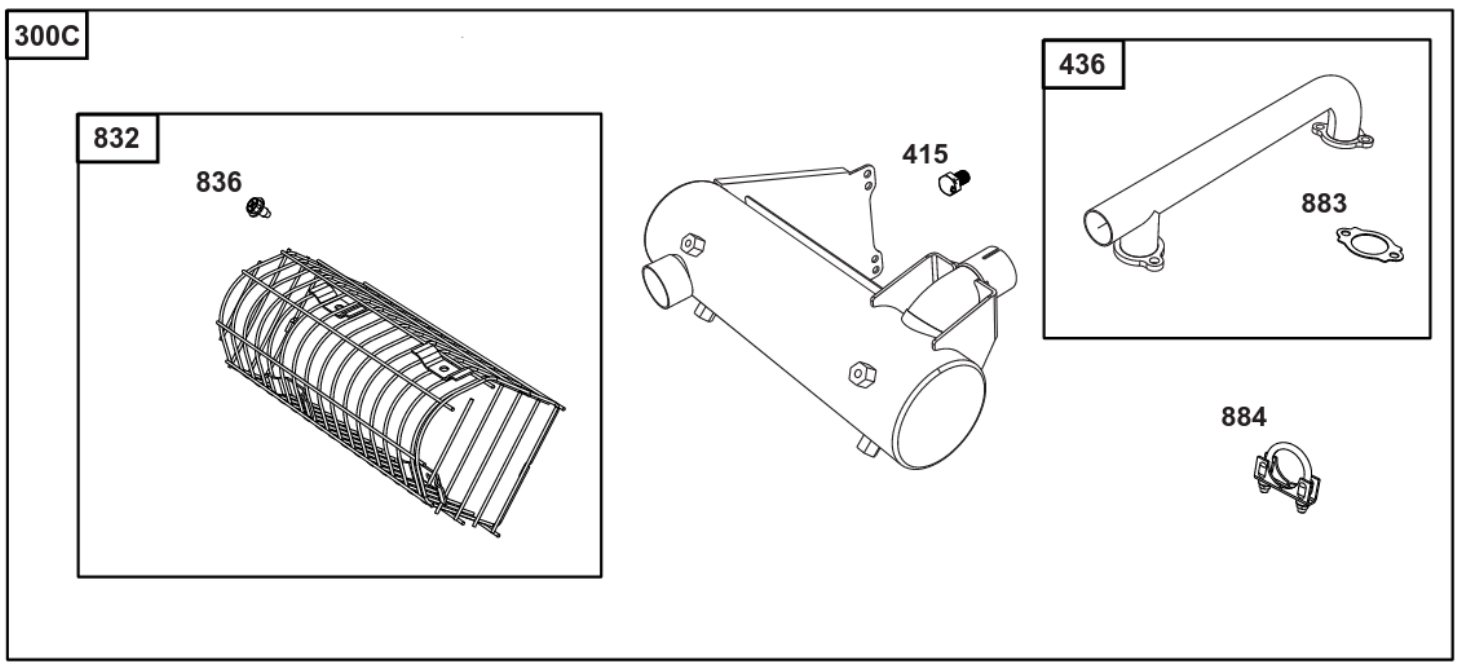

Not For Reproduction

Copyright © Briggs & Stratton. All Rights reserved

Oil Filter Side Outlet Mufflers

REF NO	PART NO	QTY	DESCRIPTION
296	844813	4	STUD -(Muffler)
300	846819	1	MUFFLER -(High Mount) (Oil Filter Side Outlet) (EFI)
300A	846246	1	MUFFLER -(Mid Mount) (Oil Filter Side Outlet)
300B	847486	1	MUFFLER -(Mid Mount) (Oil Filter Side Outlet) (EFI)
300C	847278	1	MUFFLER -(Side Mount) (Oil Filter Side Outlet) (EFI)
300D	84007299	1	MUFFLER -(Vertical Shaft)(Oil Filter Side Outlet)
415	596859	1	PLUG
436	841681	1	MANIFOLD, Exhaust
613	596859		PLUG -(Muffler)
725	847229	1	SHIELD, Heat
725A	844338	1	SHIELD, Heat
725B	847487	1	SHIELD, Heat
728	692067	2	SCREW -(Heat Shield)
740	703164	2	NUT -Muffler Bracket
819	5025011X8SM	2	CAPSCREW, Hex Head, 5/16-18 X 1 -(Muffler Bracket)
832	841682	1	GUARD, Muffler
836	841233	4	SCREW -(Muffler Guard)
883	809872	2	GASKET, Exhaust
884	841968	1	CLAMP, Muffler
1449	703350	4	WASHER -(Muffler)

Not For Reproduction

Copyright © Briggs & Stratton. All Rights reserved

300

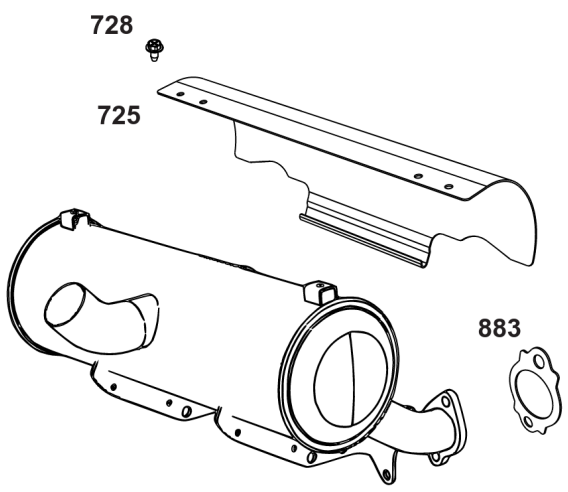

300A

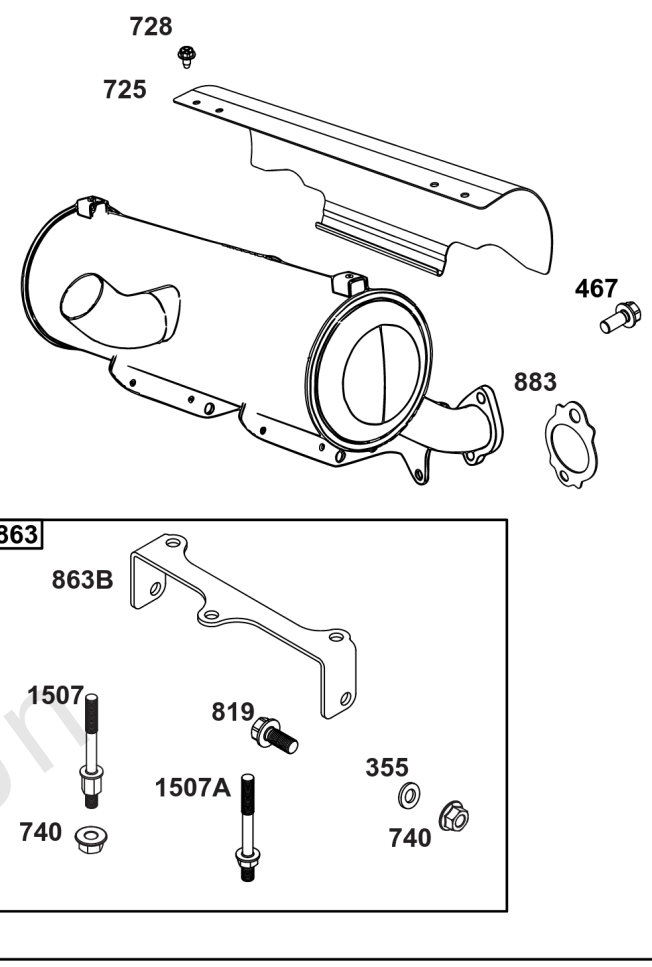

300B

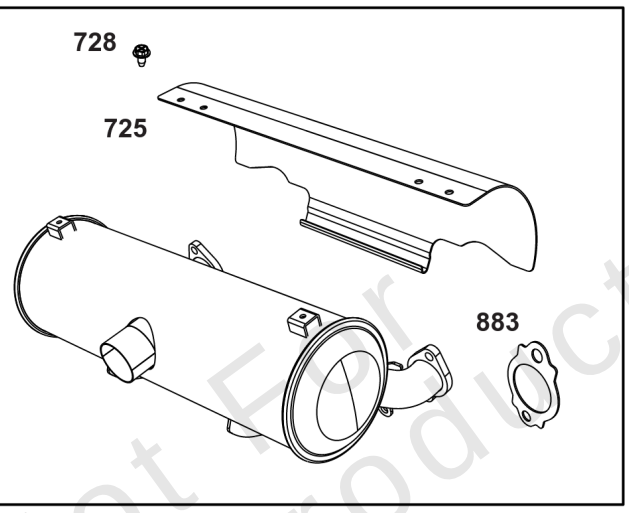

300C

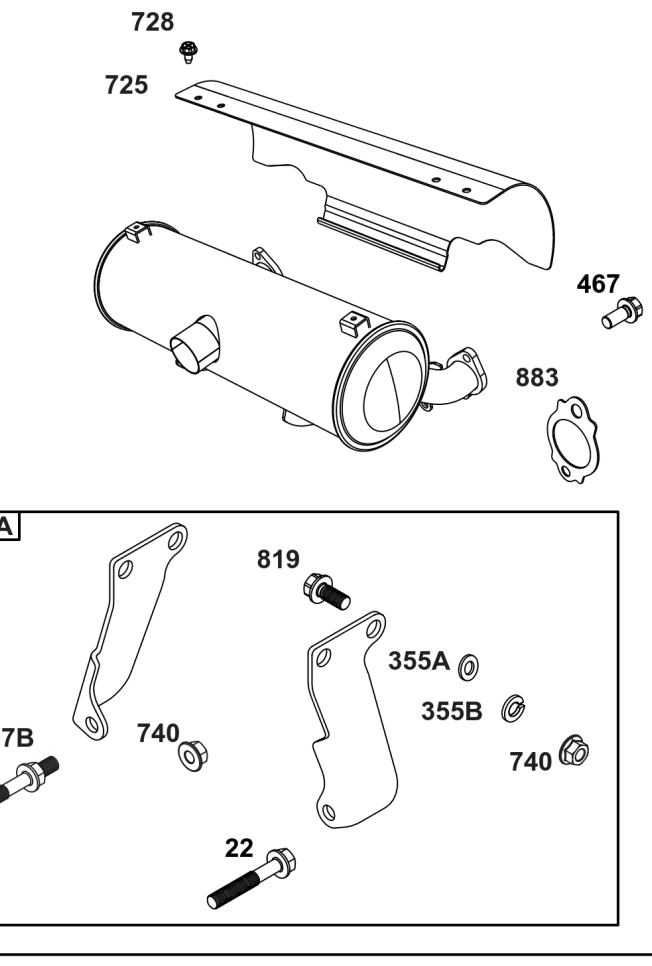

300D

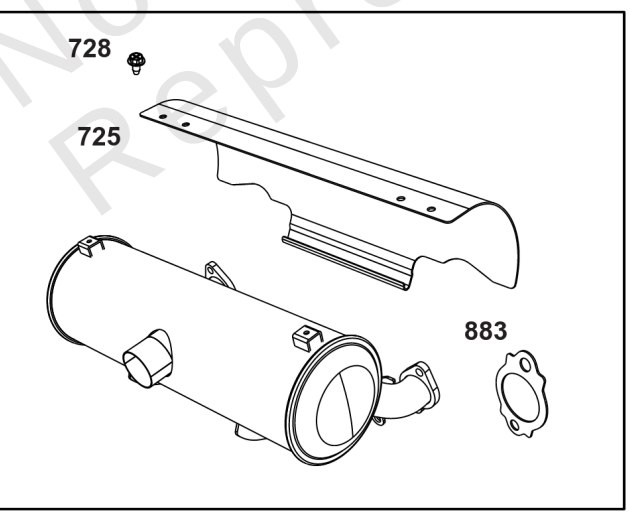

300E

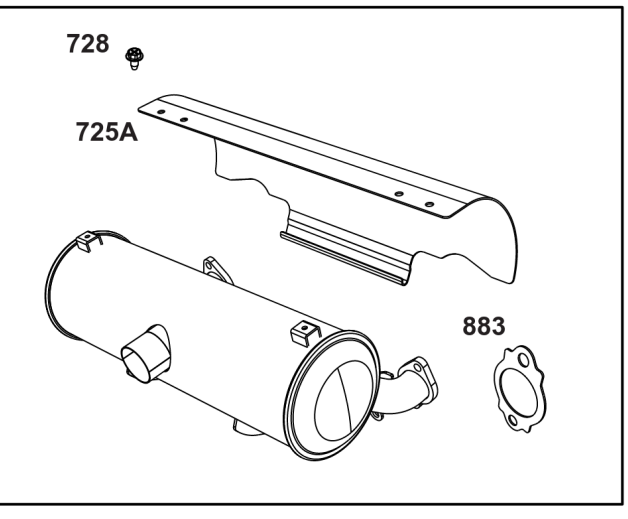

Not For Reproduction

Center Outlet Mufflers

REF NO	PART NO	QTY	DESCRIPTION
22	807362	2	SCREW -(Muffler Bracket)
300	846443	1	MUFFLER -(Vertical Shaft) (Center Outlet) (304 Stainless Steel)
300A	847940	1	MUFFLER -(Vertical Shaft) (Center Outlet) (304 Stainless Steel) (Performance Muffler for 40 HP)
300B	846154	1	MUFFLER -(Horizontal Shaft) (High Mount) (Center Outlet)
300C	847922	1	MUFFLER -(Horizontal Shaft) (High Mount) (Center Outlet) (304 Stainless Steel) (Performance Muffler for 40 HP)
300D	846444	1	MUFFLER -(Horizontal Shaft) (High Mount) (Center Outlet) (304 Stainless Steel)
300E	847478	1	MUFFLER -(Horizontal Shaft) (High Mount) (Center Outlet) (O2 Sensor Port) (EFI)
355	844035	2	WASHER -(Muffler Bracket)
355A	691261	2	WASHER -(Muffler Bracket)
355B	691075	8	WASHER -(Muffler Bracket)
467	846149	4	SCREW -(Exhaust Manifold)
725	841132	1	SHIELD, Heat
725A	847229	1	SHIELD, Heat
728	692067	2	SCREW -(Heat Shield)
740	690941	5	NUT
819	692062	2	SCREW -(Muffler Bracket)
863	848296	1	BRACKET, Muffler
863A	843487	1	BRACKET, Muffler
863B	848296	1	BRACKET, Muffler
883	809872	2	GASKET, Exhaust
1507	848297	1	STUD -(Muffler Bracket)
1507A	848298	2	STUD -(Muffler Bracket)
1507B	846324	2	STUD -(Muffler Bracket)

Not For Reproduction

Copyright © Briggs & Stratton. All Rights reserved

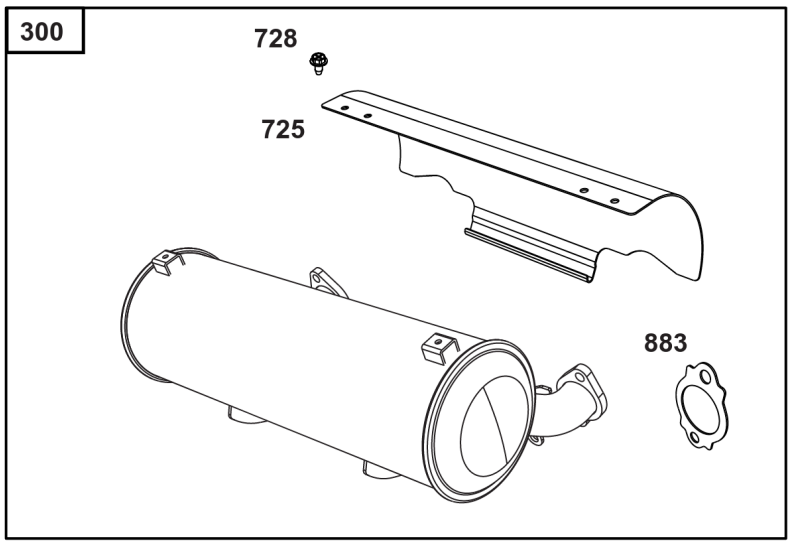

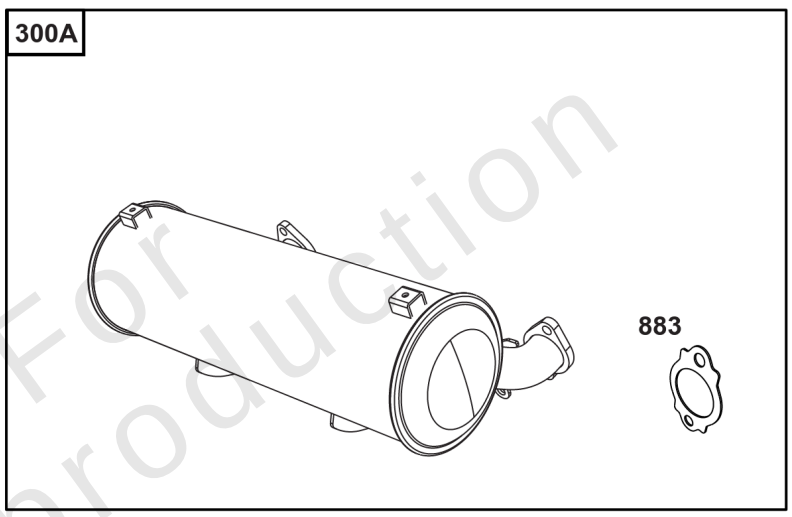

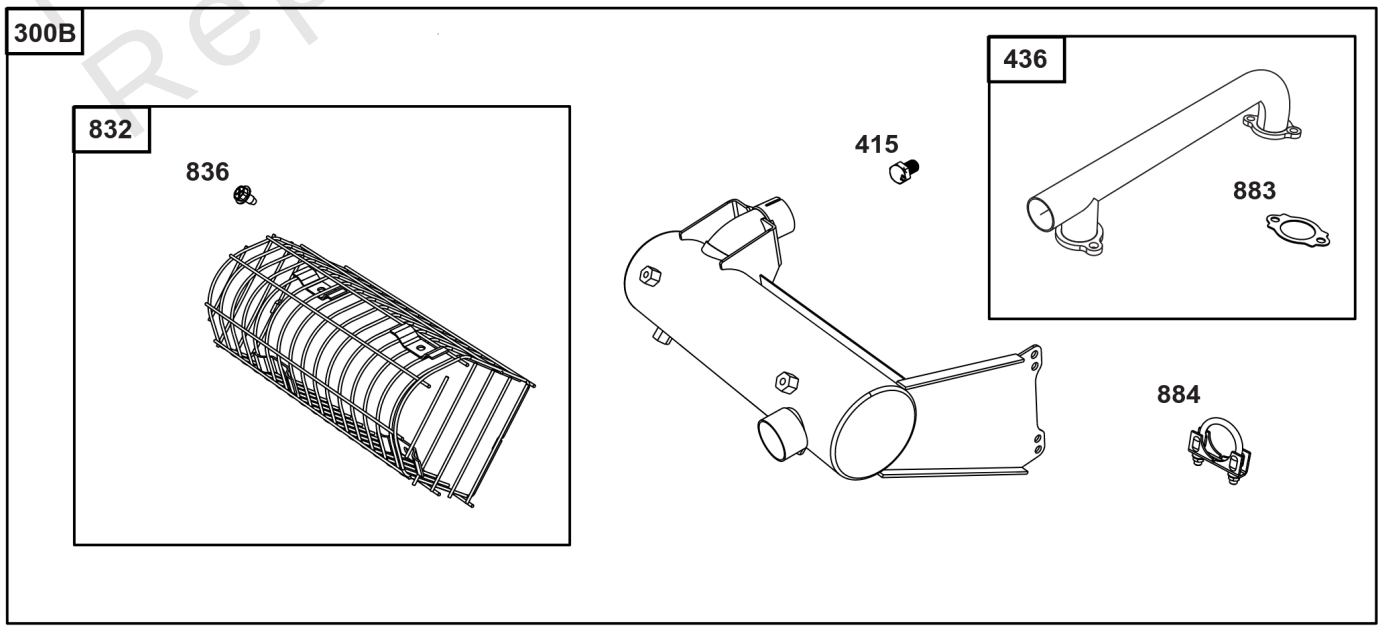

Not For Reproduction

Starter Side Outlet Mufflers

REF NO	PART NO	QTY	DESCRIPTION
300	845741	1	MUFFLER -(High Mount) (Starter Side Outlet)
300A	847083	1	MUFFLER -(Starter Side Outlet) (EFI)
300B	847279		MUFFLER -(Side Mount) (Starter Side Outlet) (EFI)
415	596859	1	PLUG
436	842263	1	MANIFOLD, Exhaust
725	841132	1	SHIELD, Heat
728	692067	2	SCREW -(Heat Shield)
832	841682	1	GUARD, Muffler
836	841233	4	SCREW -(Muffler Guard)
883	809872	2	GASKET, Exhaust
884	841968	1	CLAMP, Muffler

Not For Reproduction

Copyright © Briggs & Stratton. All Rights reserved

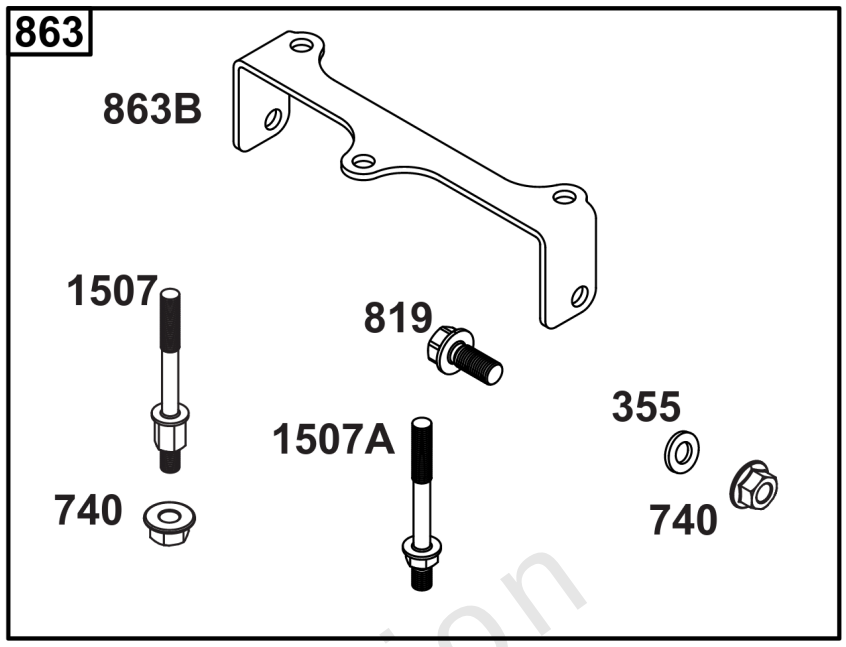

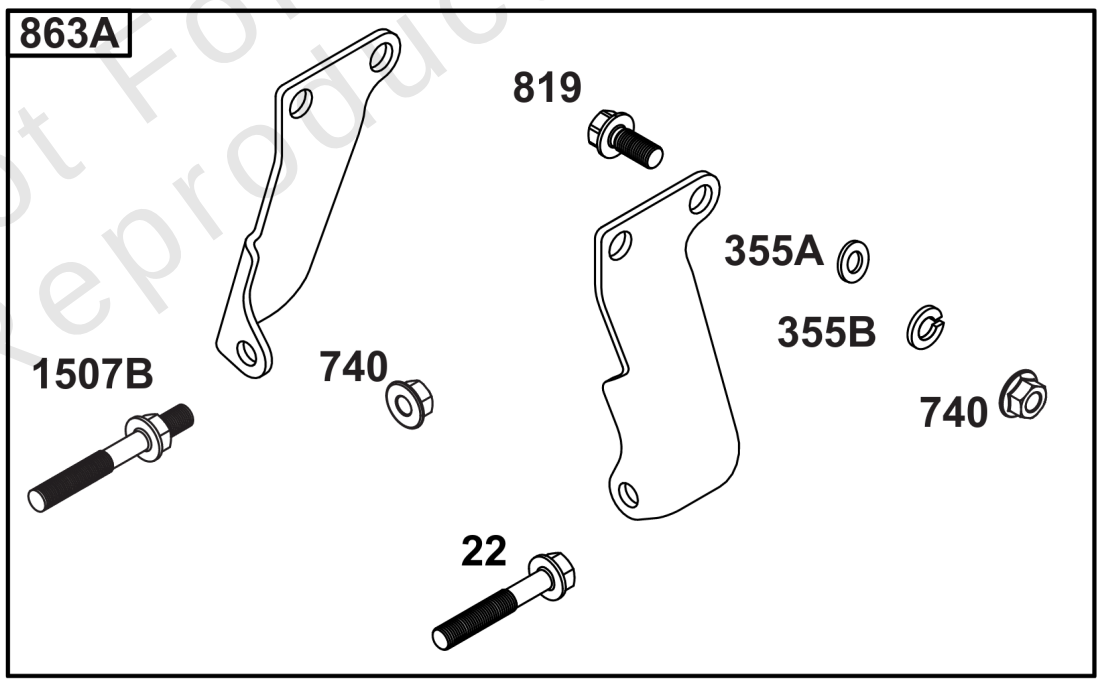

Not For Reproduction

Copyright © Briggs & Stratton. All Rights reserved

Muffler Bracket Kits

REF NO	PART NO	QTY	DESCRIPTION
22	807362	2	SCREW -(Muffler Bracket)
355	844035	2	WASHER -(Muffler Bracket)
355A	691261	2	WASHER -(Muffler Bracket)
355B	691075	8	WASHER -(Muffler Bracket)
740	690941	6	NUT -(Muffler Bracket)
819	692062	2	SCREW -(Muffler Bracket)
863	848316	1	BRACKET, Muffler -(Vertical)
863A	843487	1	BRACKET, Muffler -(Horizontal)
863B	848296	1	BRACKET, Muffler -(Vertical)
1507	848297	1	STUD -(Muffler Bracket)
1507A	848298	2	STUD -(Muffler Bracket)
1507B	846324	2	STUD -(Muffler Bracket)

Not For Reproduction

Copyright © Briggs & Stratton. All Rights reserved

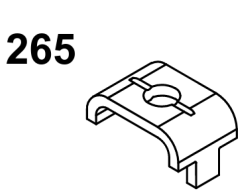

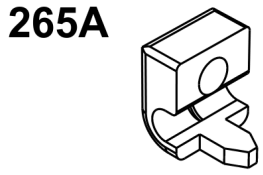

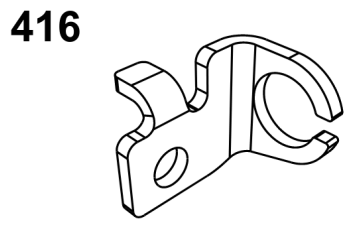

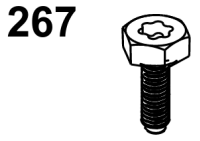

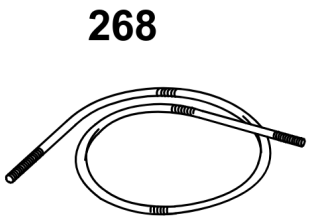

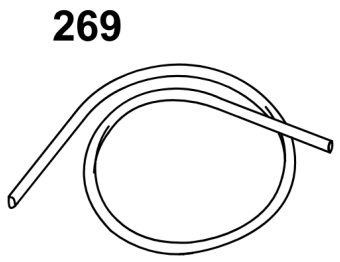

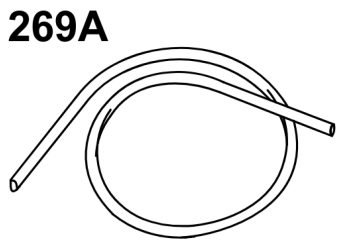

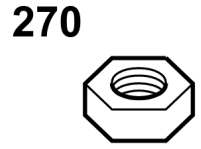

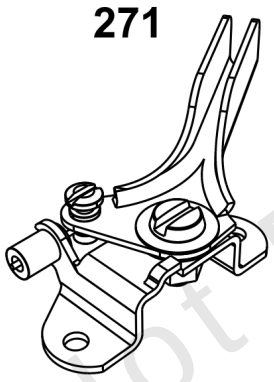

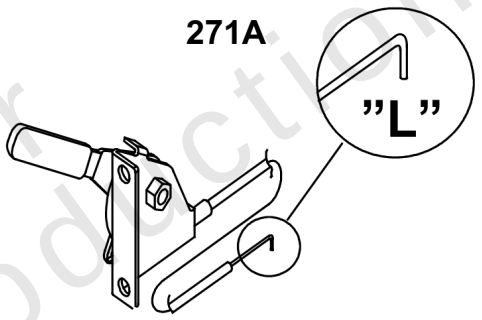

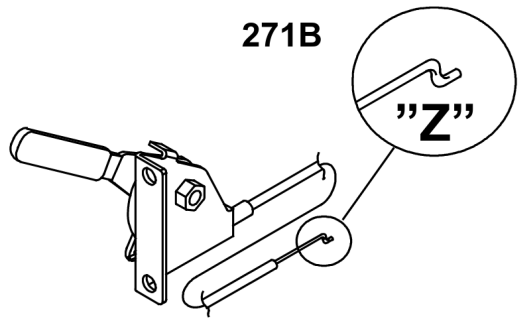

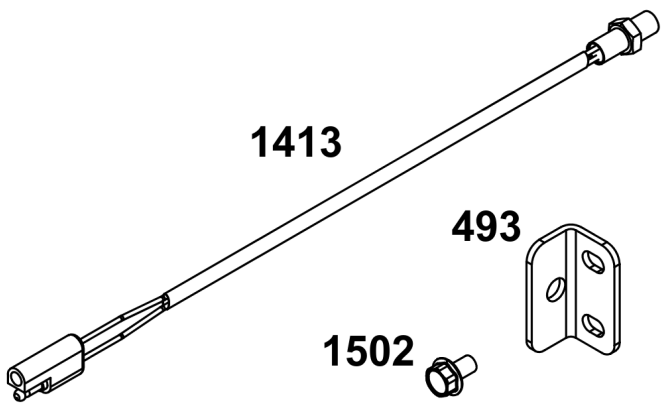

Not For Reproduction

Copyright © Briggs & Stratton. All Rights reserved

Speed Control

REF NO	PART NO	QTY	DESCRIPTION
265	691024	1	CLAMP, Casing -(Casing Clamp for Hard Casing)
265A	690798	1	CLAMP, Casing -(Casing Clamp for Soft Casing)
267	792629	1	SCREW -(Screw for Casing Clamp)
268	691025	1	CASING, Control Wire -(Wire Casing 72")
269	691026	1	WIRE, Control -(Control Wire 78")
269A	93907	1	WIRE, Control -(Control Wire 100")
270	691027	1	NUT -(Nut for Wire Casing)
271	691028	1	LEVER, Control
271A	692105	1	LEVER, Control -(Wire with “L” formed end)
271B	692541	1	LEVER, Control -(Wire with “Z” formed end)
416	595196	1	BRACKET, Throttle Cable -(Casing Clamp for Snap-In Casing)
493	842713	1	BRACKET, Mounting -(Speed Sensor)
1413	844449	1	SENSOR, Speed -(Requires 842713 Bracket and two 841233 screws)
1502	841233	2	SCREW -(Speed Sensor)

Not For Reproduction

Copyright © Briggs & Stratton. All Rights reserved

330

853

415

1616

1518

983

789

789A

789B

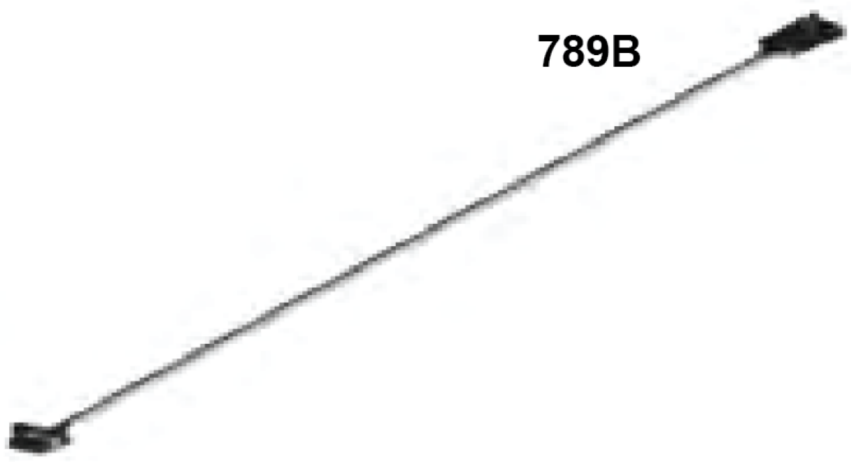

Not For Reproduction

Copyright © Briggs & Stratton. All Rights reserved

Electrical

REF NO	PART NO	QTY	DESCRIPTION
330	847476	1	SENSOR, Oxygen -(Extended Length O2 Sensor 23.5")
415	1714480SM	1	PLUG -(Plug for Ignition Switch Removal)
789	809967	1	HARNESS, Wiring -(Wire Harness Extension 8 Pin – 22”) (Use with standard key switch 692318 or water/dust resistant key switch 847448)
789A	846776	1	HARNESS, Wiring -(Wire Harness Extension 6 Pin – 22”) (Use with standard key switch 692318 or water/dust resistant key switch 847448)
789B	847017	1	WIRE ASSEMBLY -(Wire Harness Extension for 847016 Tach 32")
853	80028618	1	ADAPTER, Wire -(Wire Harness Adapter 6 Pin to 8 Pin)
983	5103809YP	1	LIGHT, Indicator -(MIL Light Indicator, LED Red)
1518	847016	1	TACHOMETER -(Tach, Hour Meter with MIL Light for EFI Engines)
1616	19626	1	CODE READER -(Tiny Scan)

Not For Reproduction

Copyright © Briggs & Stratton. All Rights reserved

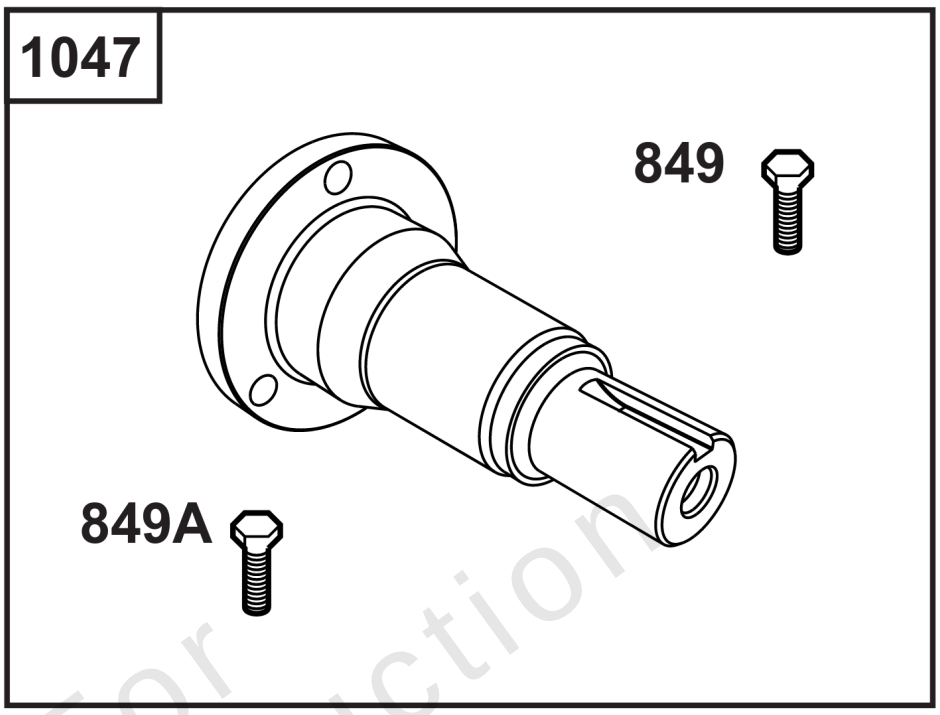

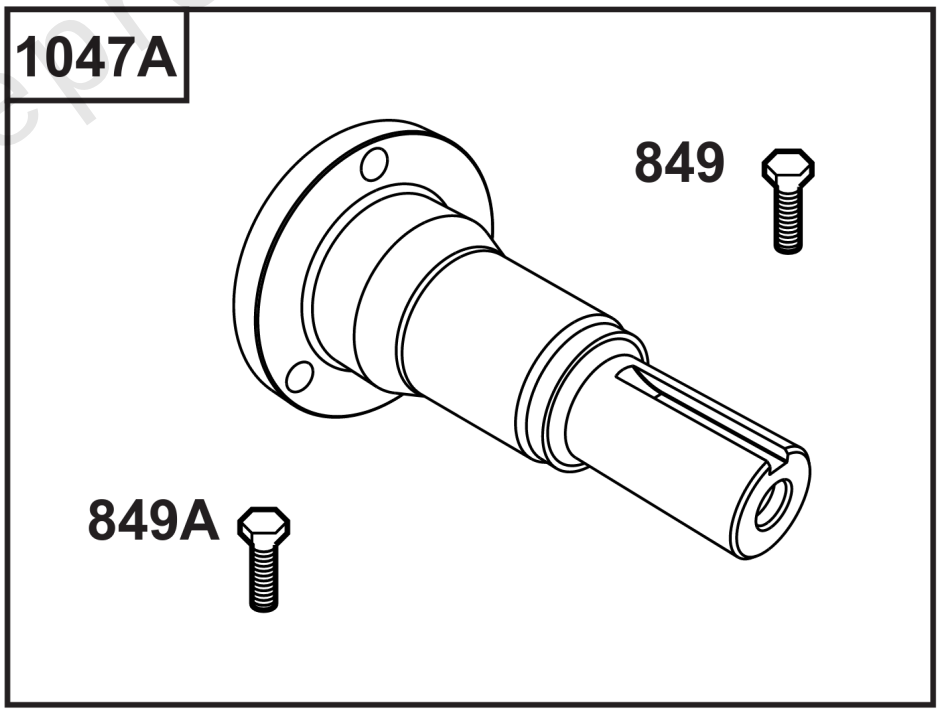

Not For Reproduction

Copyright © Briggs & Stratton. All Rights reserved

Stub Shafts

REF NO	PART NO	QTY	DESCRIPTION
849	596370	3	SCREW -(Stub Shaft)
849A	846235	3	SCREW -(Stub Shaft)
1047	841304	1	SHAFT, Stub -(Flywheel Mounted) (1-1/8" diameter, 148 mm length)
1047A	843342	1	SHAFT, Stub -(Flywheel Mounted) (1-1/8" diameter, 176 mm length)

Not For Reproduction

Copyright © Briggs & Stratton. All Rights reserved

613

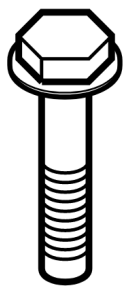

437

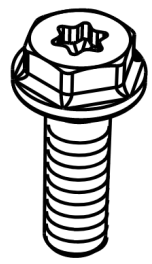

151

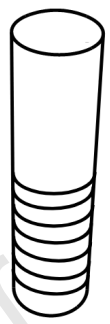

1177

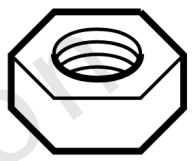

883

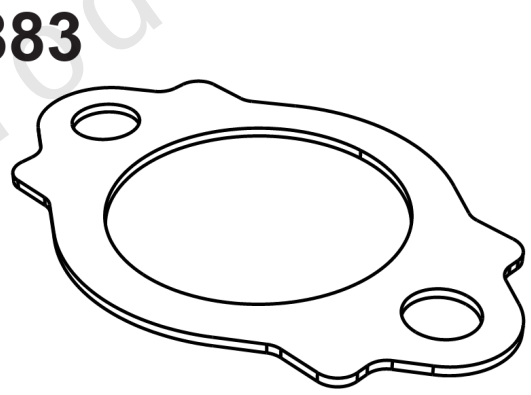

994

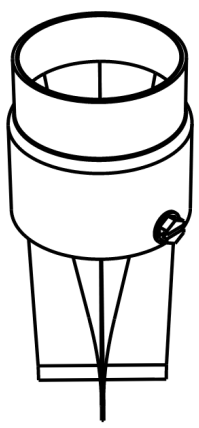

301

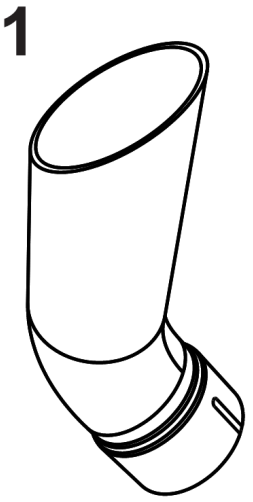

Not For Reproduction

Copyright © Briggs & Stratton. All Rights reserved

Spark Arrester/Deflector

REF NO	PART NO	QTY	DESCRIPTION
151	841185	4	STUD -(4 per engine)
301	841518	1	PIPE, Exhaust -(For 44.7 O.D. muffler outlet pipe) (Requires clamp 843624)
437	809743	4	SCREW -(M8 x 25 for Mounting Mufflers) (4 per engine)
613	692062	4	SCREW -(M8 x 18 for Mounting Mufflers) (4 per engine)
883	809872	2	GASKET, Exhaust -(2 per engine)
994	843204	1	ARRESTOR, Spark -(1.75") (44.7 mm) (O.D. Outlet Tube)
1177	842067	4	NUT -(Required if using 841185 stud)

Not For Reproduction

Copyright © Briggs & Stratton. All Rights reserved

805A

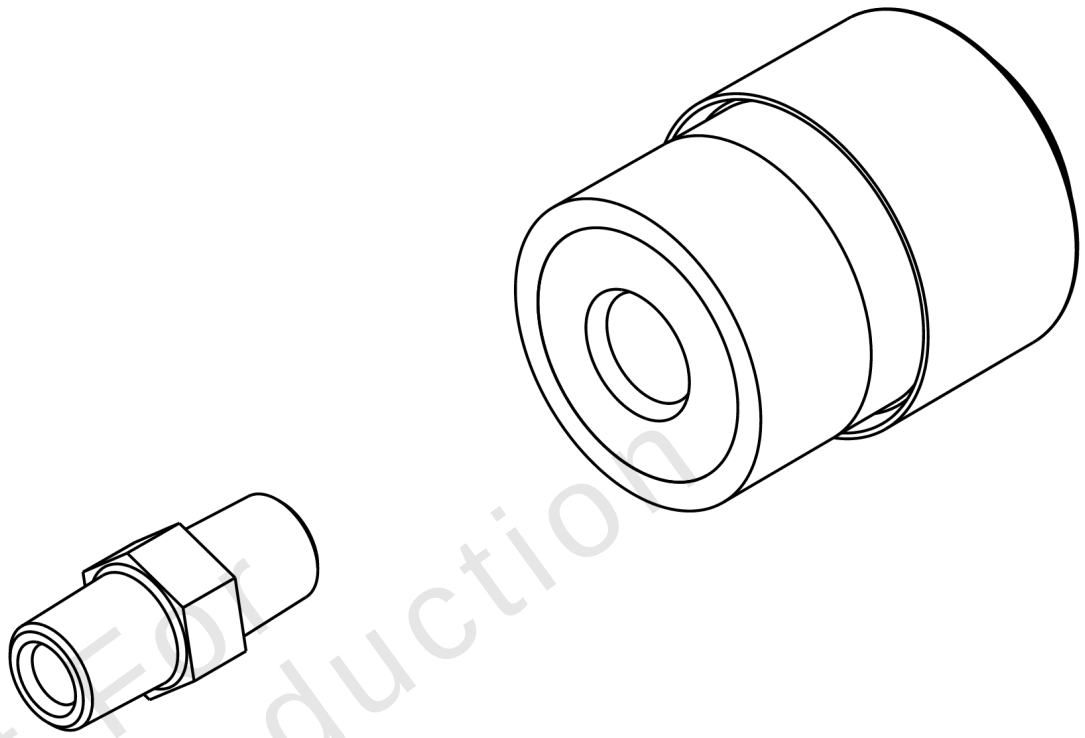

Not For Reproduction

Copyright © Briggs & Stratton. All Rights reserved

Air Intake

REF NO	PART NO	QTY	DESCRIPTION
805A	843024	1	MINDER, Filter

Not For Reproduction

Copyright © Briggs & Stratton. All Rights reserved

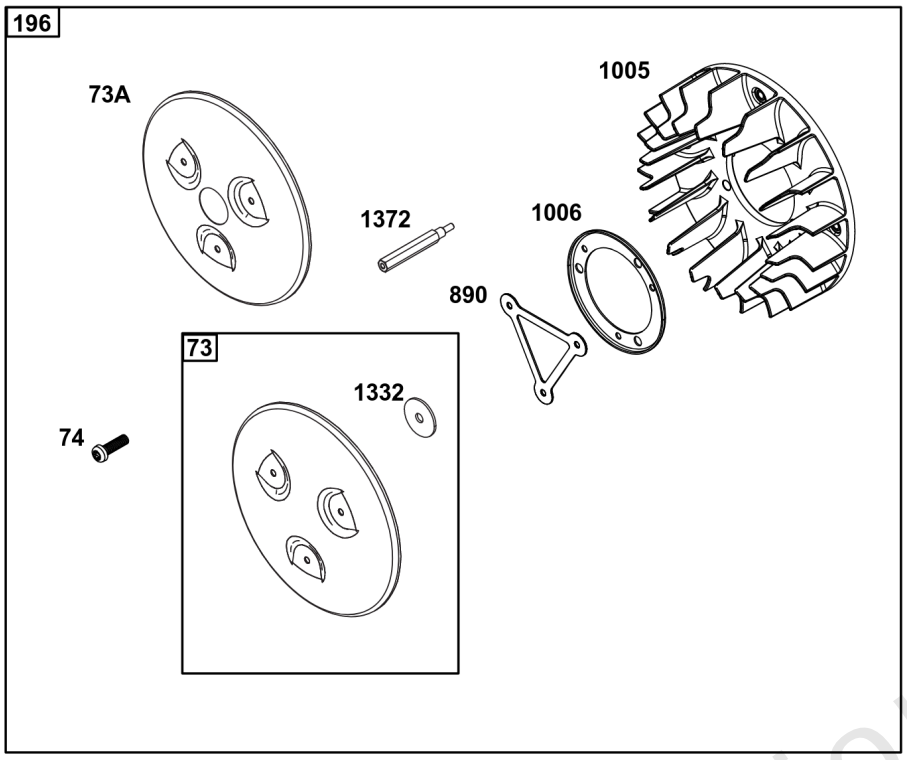

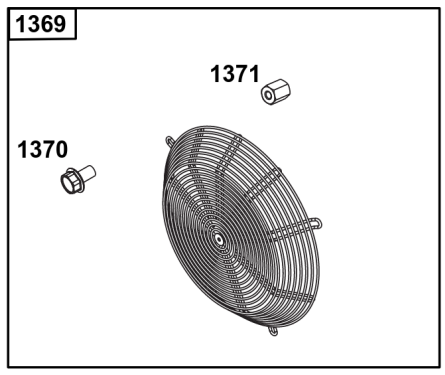

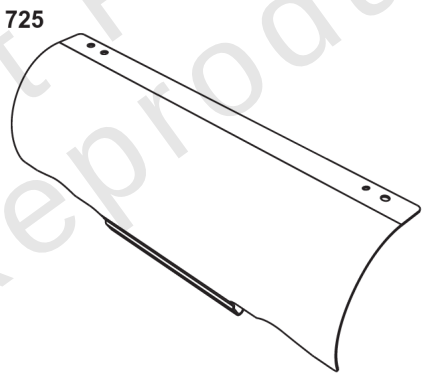

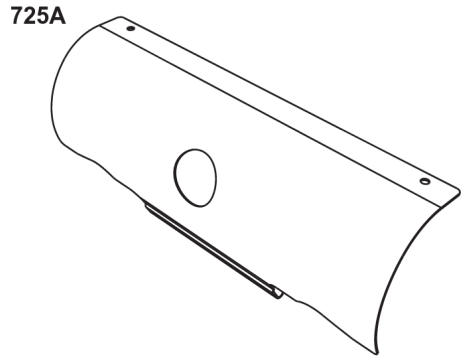

Not For Reproduction

Copyright © Briggs & Stratton. All Rights reserved

Guarding

REF NO	PART NO	QTY	DESCRIPTION
73	841840	1	SCREEN, Rotating
73A	842248	1	SCREEN, Rotating
74	809947	3	SCREW -(Rotating Screen) (M6x20mm)
196	847200	1	GUARD, Flywheel Fan
725	841132	1	SHIELD, Heat -(Requires 2 x 692067 Screw)
725A	847229	1	SHIELD, Heat -(With 02 Sensor Hole) (EFI)
890	809987	1	BRACKET, Support
1005	846996	1	FAN, Flywheel
1006	847198	1	RETAINER, Fan
1332	809948	3	WASHER
1369	995019	1	FAN/SCREEN ASSEMBLY
1370	841233	4	SCREW -(Flywheel Fan Guard)
1371	841537	4	NUT -(Flywheel Fan Guard)
1372	809946	3	STUD

Not For Reproduction

Copyright © Briggs & Stratton. All Rights reserved

1623

1596

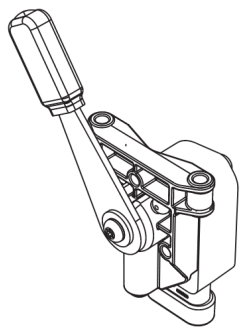

983

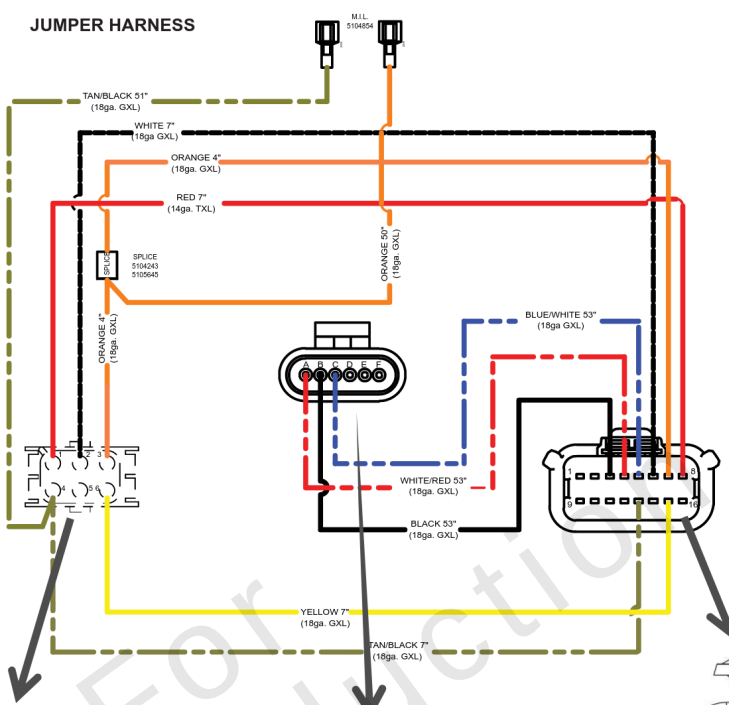

Repower Application

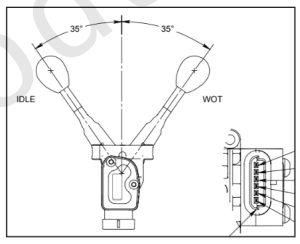

Electronic Throttle Control

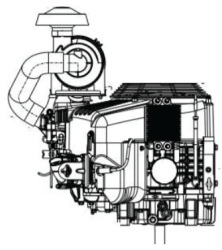

EFI/ETC engine

578

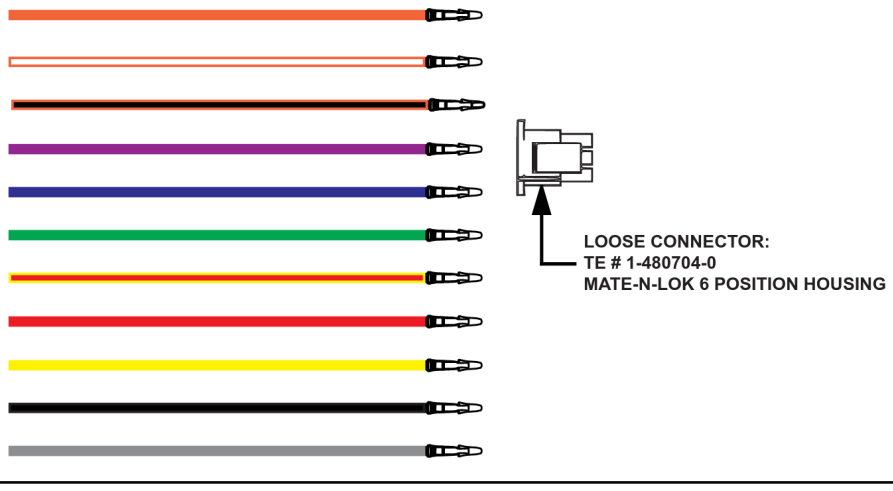

Not For Reproduction

Copyright © Briggs & Stratton. All Rights reserved

Electronic Throttle Kit

REF NO	PART NO	QTY	DESCRIPTION
578	84007350	1	WIRE ASSEMBLY
983	5103809YP	1	LIGHT, Indicator
1596	84007271	1	LEVER, Electronic Throttle
1623	84008670	1	KIT, Throttle Assembly -(Analog Electronic Throttle Control)

Not For Reproduction

Copyright © Briggs & Stratton. All Rights reserved

VANGUARD®

COMMERCIAL POWER

BRIGGS & STRATTON®

Copyright © Briggs & Stratton. All Rights reserved

18-Apr-2024