Parts Manual

Mfg. No: 1006-0
6,500 Watt

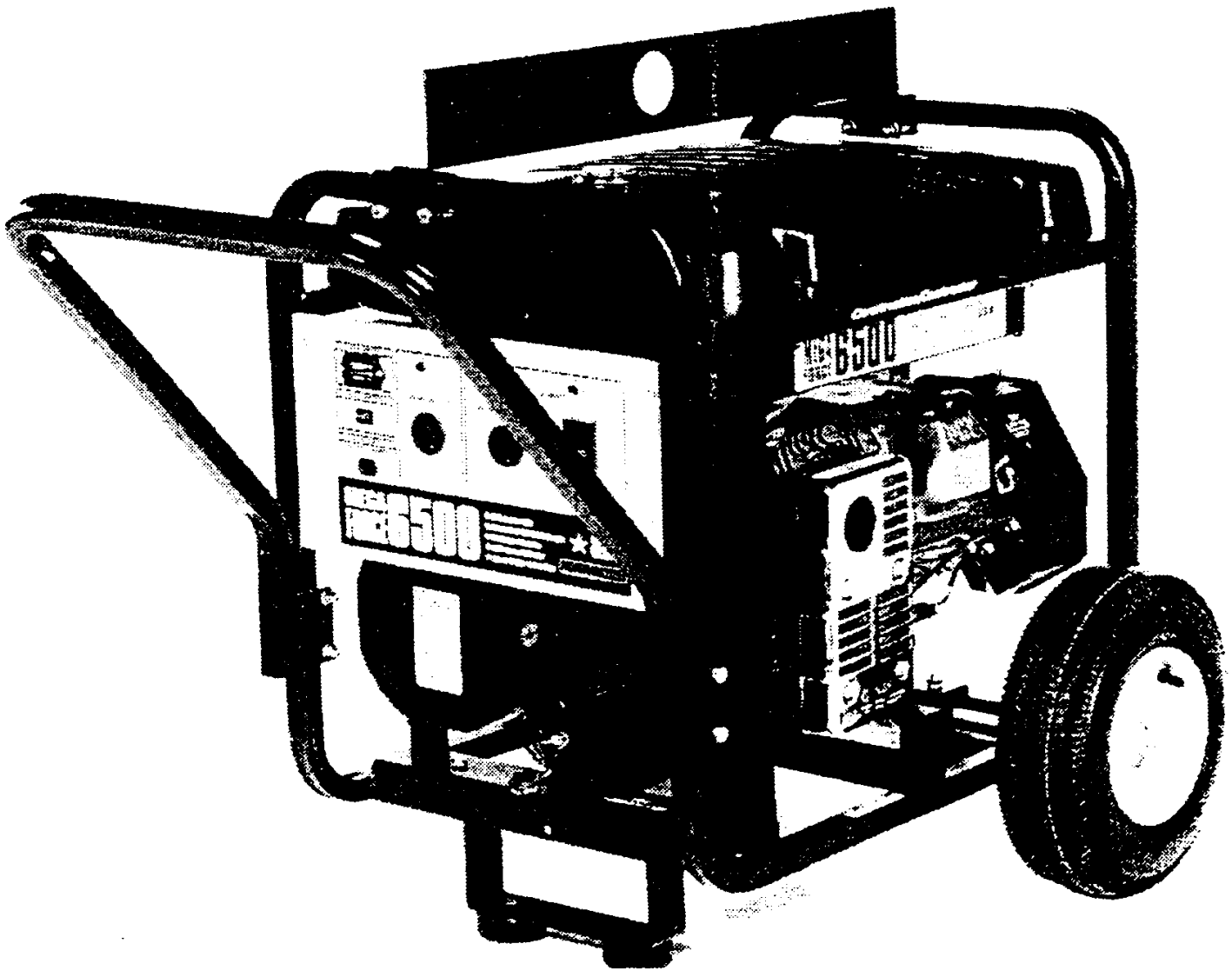

Copyright © Briggs & Stratton. All Rights reserved

Model Components

Page

Control Panel. 4
Electrical Data. 6
Generator. 8
Wheel Kit And Lift Kit. 12
Torque Specification Chart. 14

Not For Reproduction

Copyright © Briggs & Stratton. All Rights reserved

Control Panel

Note: Unless noted otherwise, use the standard torque specifications

Mfg. No: 1006-0

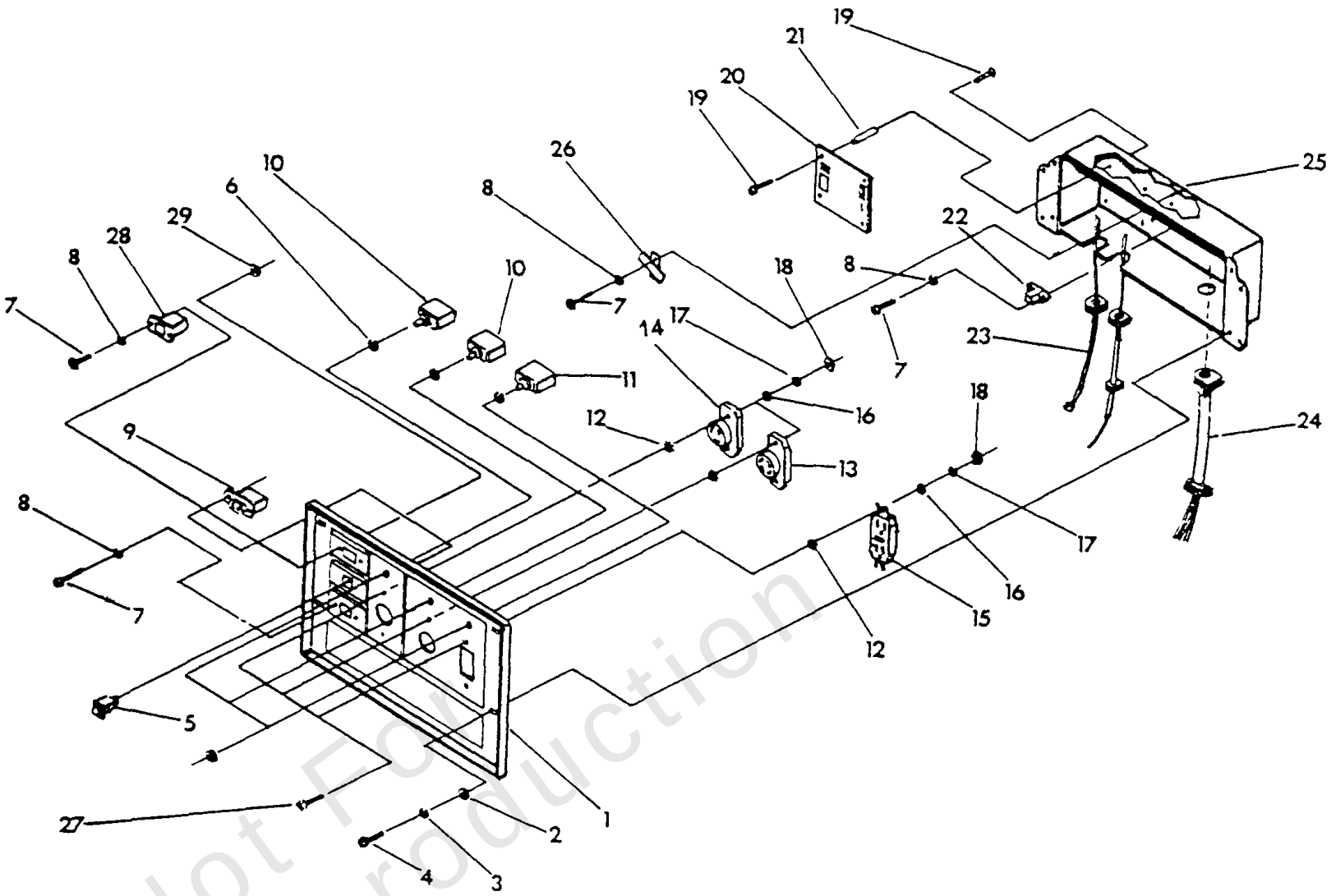

Not For Reproduction

Copyright © Briggs & Stratton. All Rights reserved

Control Panel

REF NO	PART NO	QTY	DESCRIPTION
1	92570	1	Control Panel
2	23897	4	#10 (M5) Flat Washer
3	49226	4	M5 Lock Washer
4	91526	4	M5-0.8 x 12mm Screw
5	87968	1	Idle Control Switch
6	82881	4	7/16" Lock Washer
7	43181	8	M3-0.5 x 10mm Screw
8	43182	8	M3 Lock Washer
9	66822	1	12V Outlet & Ret. Bracket -(66822 Is Screw In Replacement. If Customer Needs Snap Type Must Order 90418.)
10	75207-A	2	30A Circuit Breaker
11	75207	2	20A Circuit Breaker
12	23365	6	#8 Shakeproof Washer
13	68868	1	120 Volt, 30 Amp Locking Type Outlet
14	43437	1	120V/240V, 30A Locking Type Outlet
15	80409	1	Recep GFCI 20 A Duplex
16	43108	6	M4 Flat Washer
17	22264	6	#8 (M4) Lock Washer
18	51715	6	M4-0.7 Hex Nut
19	64526	8	#6-32 x 3/8" Screw
20	83970	1	System Control Board
21	64525	4	3/4" Hex Stand-Off
22	87692	1	12V, 10A Cir. Breaker (Auto)
23	84335	1	Wire Harness Assembly
24	84134	1	Rubber Conn. Grommet
25	92069	1	Control Box Panel
26	84028	1	Idle Control Transformer
27	75475	6	M4-0.7 x 10mm Screw
28	77604	1	Hour Meter
29	51714	2	M3-0.5 Hex Nut

Not For Reproduction

Copyright © Briggs & Stratton. All Rights reserved

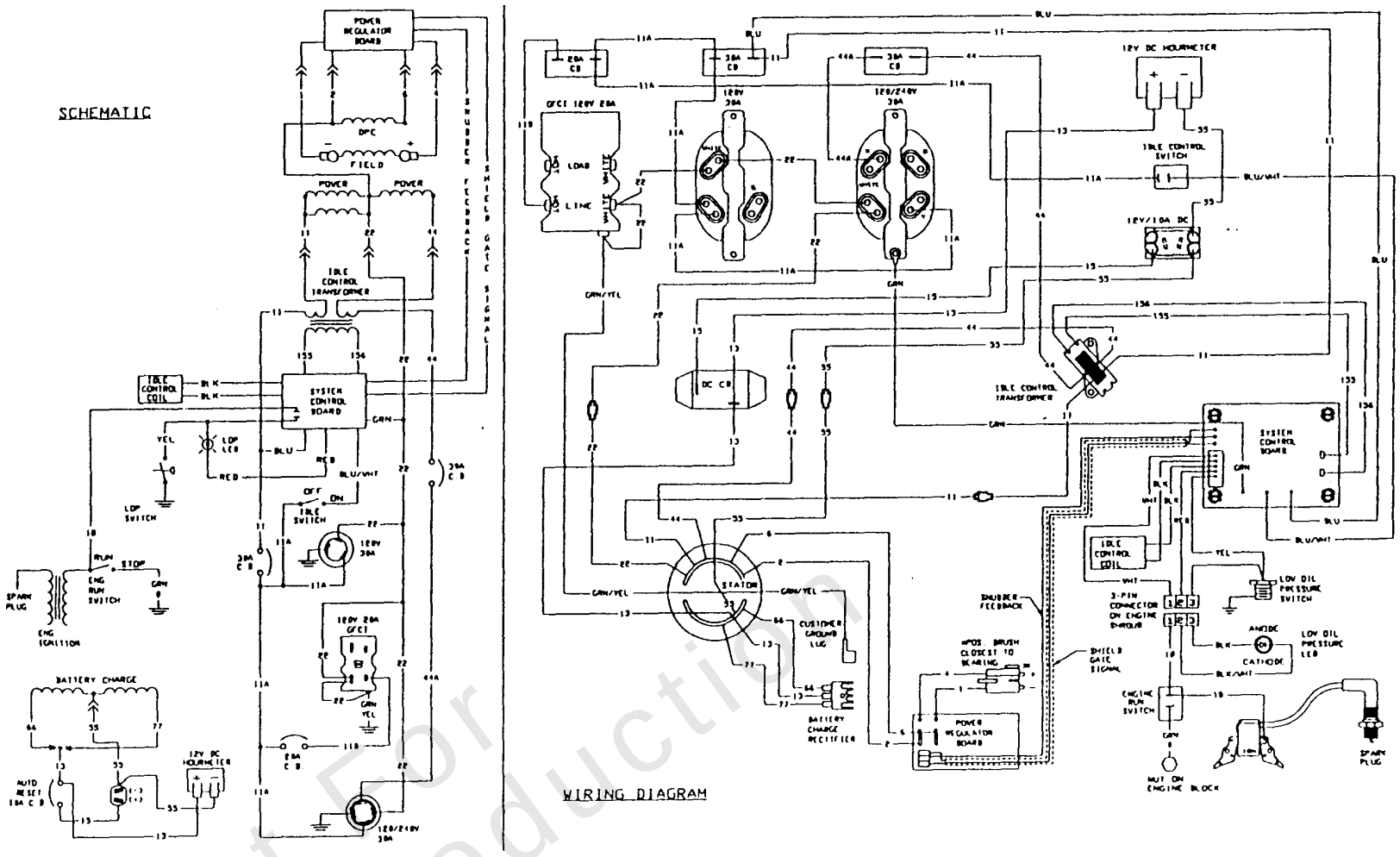

Not For Reproduction

Electrical Data

REF NO	PART NO	QTY	DESCRIPTION
--	-----		Wiring Diagram/Schematic only
--	-----		WARNING - Generator Voltage Could Cause Electrical Shock or Burn Resulting in Death Or Serious Injury. To Avoid Electrical Shock Or Burn Hazard, Please Refer Service To Qualified Personnel.

Not For Reproduction

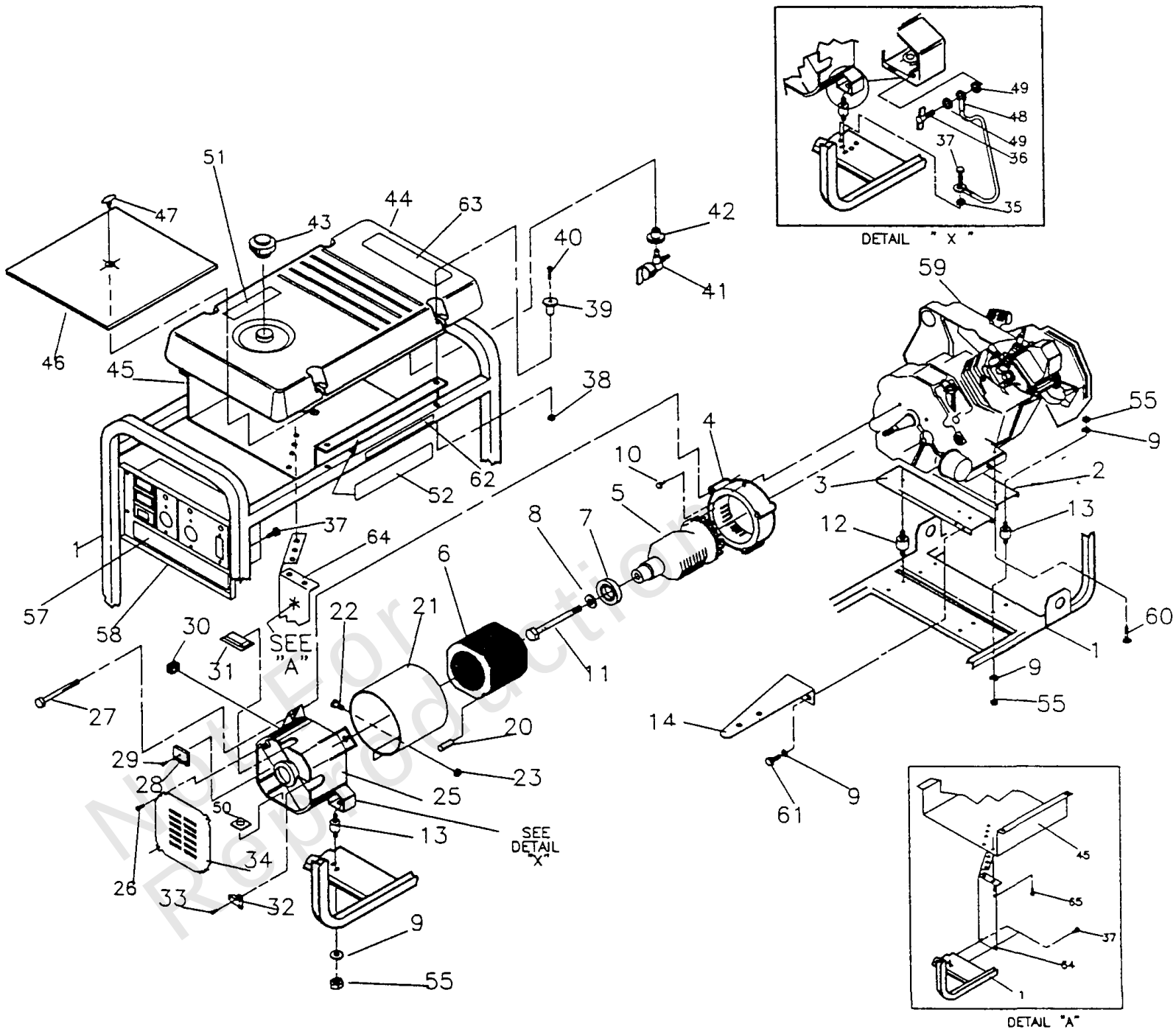

Not For Reproduction

Generator

REF NO	PART NO	QTY	DESCRIPTION
1	92432	1	Cradle
2	92531	1	Engine Support
3	92731	1	Engine & Muffler Support
4	92247	1	Engine Adapter Housing
5	92679G	1	Rotor Assembly
6	92681G	1	Stator Assembly
7	65791	1	Bearing
8	67451	1	M8 Flat Washer
9	22129	14	M8 Lock Washer
10	86307	4	5/16-24 x 3/4 Mach. Screw
11	25254	1	5/16-24 x 9-7/8" Screw
12	92609	2	Vibration Mount
13	82857	4	Vibration Mount
14	-----	1	Muffler Bracket -(Ref only)
20	81917	1	4mm x 10 Roll Pin
21	81887G	1	Stator Wrap
22	52618	2	HHCS M5 - 0 8 X 12MM
23	52856	2	Nut, locking-M5
25	66825C	1	Rear Bearing Carrier
26	74908	4	M5-0.8 x 10 Taptite
27	86308B	4	M6-1 x 165mm Stator Bolt
28	65795	1	Battery Charge Rectifier
29	66849A	1	M5-0.8 x 20 Taptite
30	67022	1	Rubber Grommet
31	84132	1	Power Regulator Assembly
32	66386	1	Brush Holder Assembly
33	66849	2	M5-0.8 x 16 Taptite
34	67025	1	Bearing Carrier Cover
35	22769	1	#10 Int Shakeproof
36	86494	1	M6-1 0 x 16 Wing Screw
37	86292	7	#10 Self Drilling Screw
38	77395	4	M6 Flange Lock Nut
39	83465	4	Tank Grommet
40	78831B	4	HHMS M6-1 0 x 60 (blk)
41	80270	1	Tank Valve
42	78299	1	Plastic Tank Bushing
43	94834	1	Fuel Cap
44	93595	1	Fuel Tank
45	92039	1	Heat Shield
46	92665	1	#2-1/4" Insulation
47	85000	1	Clip Insulation
48	143-53621	1	Ground Wire
49	-----	2	M6 Shakeproof
50	57593	1	Cable Tie Mount
51	92982	1	Danger Decal
52	B1223	2	Heat Shield Decal
55	25244	12	5/16-18 Hex Nut
57	B1224	1	Control Panel Decal
58	92631	1	Control Box Assembly
59	ENGA1394	1	13 Hp Engine

Not For Reproduction

Copyright © Briggs & Stratton. All Rights reserved

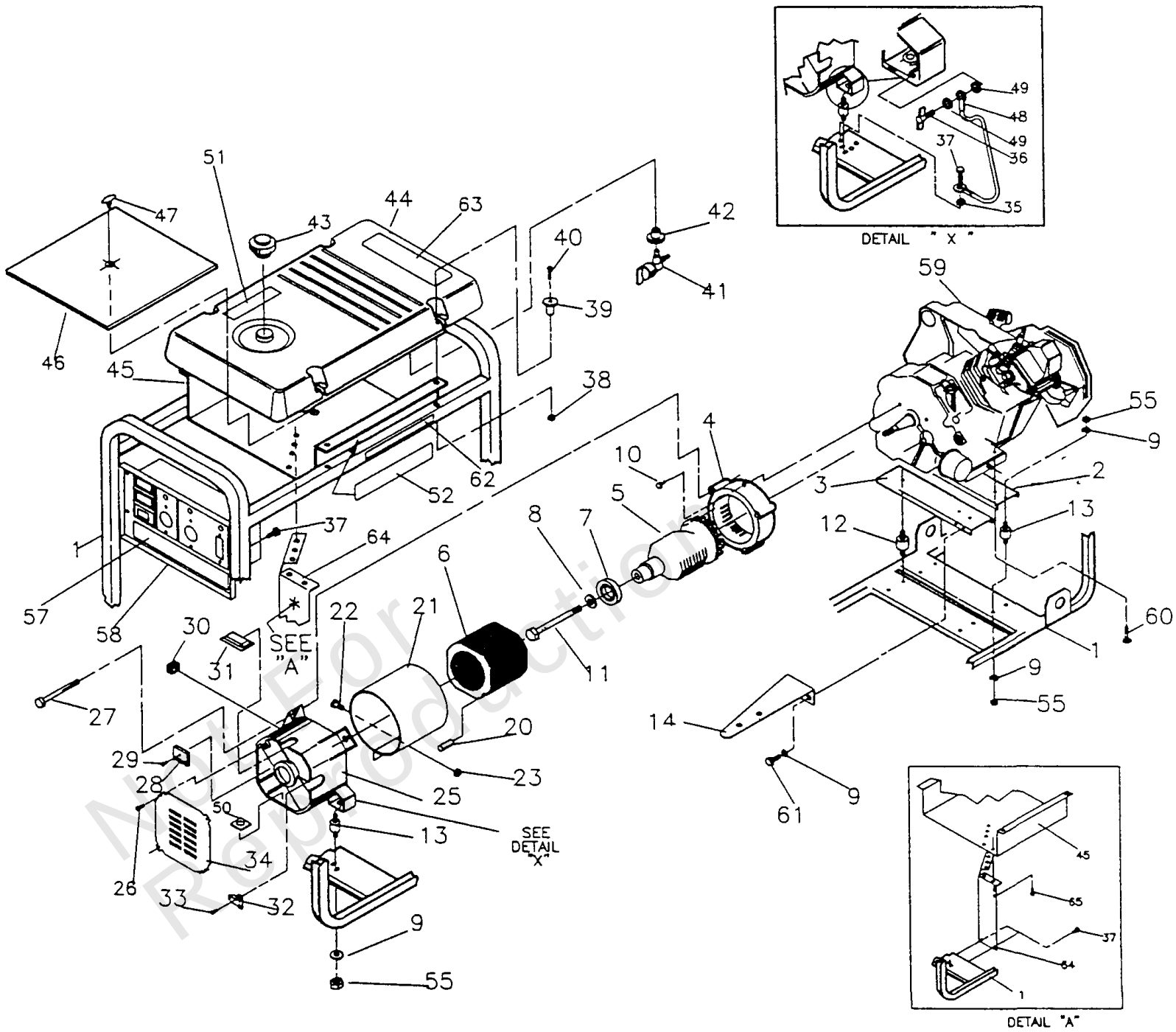

MTD Parts Reproduction

Generator

REF NO	PART NO	QTY	DESCRIPTION
60	22531	2	HHCS 5/16-18 x 1-3/4
61	22142	2	HHCS 5/16 - 18 x 3/4"
62	93221	1	Decal, Cradle
63	56893	1	Decal, Start Instructions
64	96068	1	Heat Shield
65	56893	5	Crimptite 10-24 x 1/2

Not For Reproduction

Copyright © Briggs & Stratton. All Rights reserved

Wheel Kit And Lift Kit

Note: Unless noted otherwise, use the standard torque specifications

Mfg. No: 1006-0

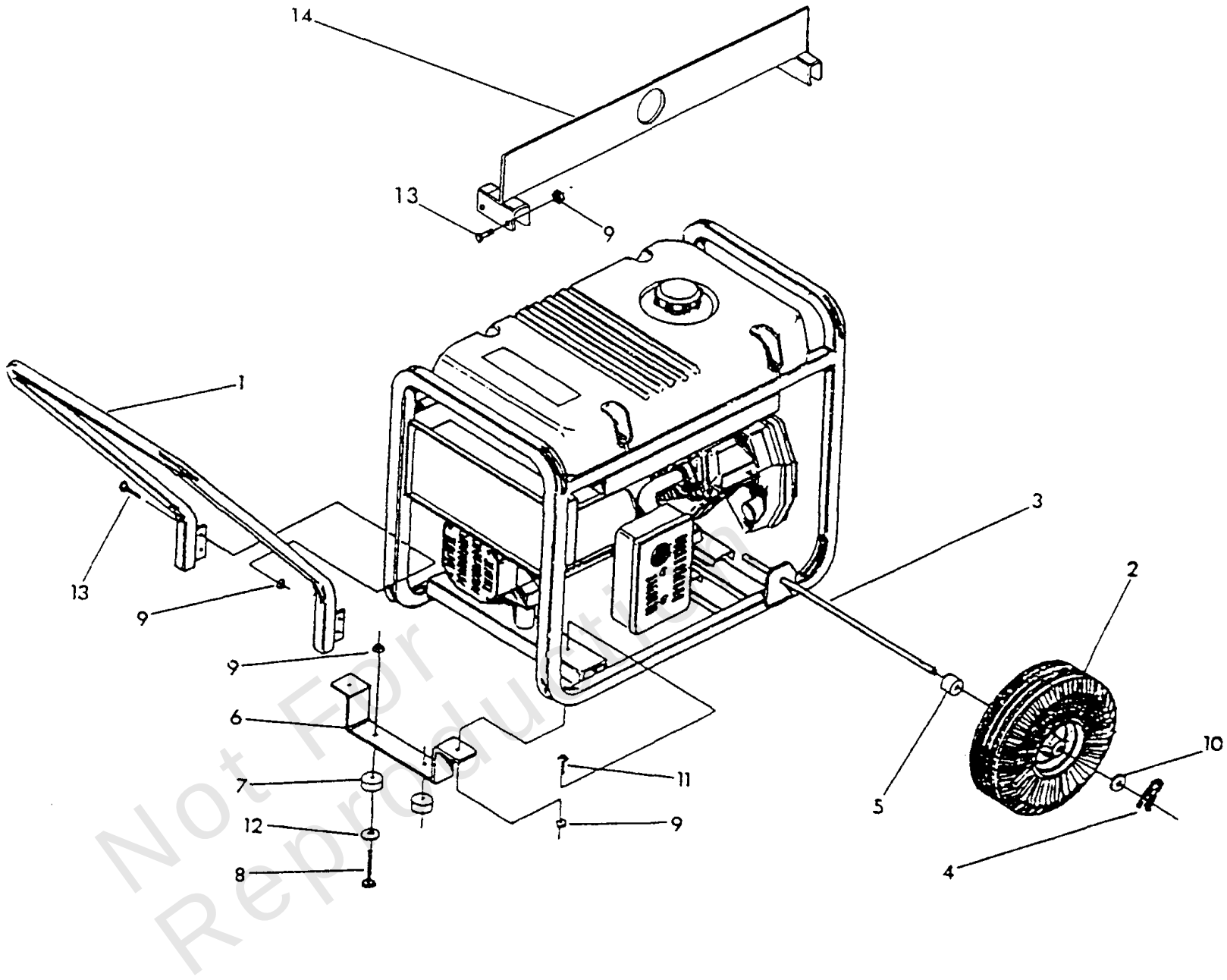

Not For Reproduction

Copyright © Briggs & Stratton. All Rights reserved

Wheel Kit And Lift Kit

REF NO	PART NO	QTY	DESCRIPTION
1	93393A	1	Handle
2	93682	2	Wheel
3	93936A	1	Axle
4	87005	2	Retaining Pin
5	93685	2	Wheel Spacer
6	93696	1	Support Leg
7	27007	2	Vibration Mount
8	42909	2	Capscr., Hex Hd. M8 - 1.25 x 30 Long
9	52858	12	Lock Nut - M8
10	22247	2	Washer (Wheel)
11	39253	2	Capscr., Hex Hd. - M8 - 1.25 x 20 Long
12	-----	2	WASHER, Flat, 5/16
13	B1214	8	HHCS - M8 - 1.25 x 45 Long GR 10.9
14	B1212	1	Lift Kit Assy.

Not For Reproduction

Copyright © Briggs & Stratton. All Rights reserved

Hardware Identification & Torque Specifications

Torque Specification Chart

FOR STANDARD METRIC MACHINE HARDWARE (Tolerance ± 20%)

Property Class	5.6 Class 5.6		8.8 Class 8.8		10.9 Class 10.9		12.9 Class 12.9	
Size Of Hardware	*in/lbs* **ft/lbs**	Nm.	*in/lbs* **ft/lbs**	Nm.	*in/lbs* **ft/lbs**	Nm.	*in/lbs* **ft/lbs**	Nm.
M3	*5.88*	*.56*	*13.44*	*1.28*	*19.2*	*1.80*	*22.92*	2.15
M4	*13.44*	*1.28*	*30.72*	*2.90*	*43.44*	*4.10*	*52.56*	4.95
M5	*26.4*	*2.50*	*60.96*	*5.75*	**5.97**	*8.10*	**7.15**	9.7
M6	*44.64*	*4.3*	**7.3**	*9.9*	**10.3**	*14*	**12.1**	16.5
M7	**5.2**	*7.1*	**12.1**	*16.5*	**16.9**	*23*	**19.9**	27
M8	**7.7**	*10.5*	**17.7**	*24*	**25**	*34*	**29**	40
M10	**15**	*21*	**35**	*48*	**50**	*67*	**59**	81
M12	**26**	*36*	**61**	*83*	**86.2**	*117*	**103**	140
M14	**42**	*58*	**101**	*132*	**136**	*185*	**162**	220
M16	**64**	*88*	**147**	*200*	**210**	*285*	**250**	340
M18	**89**	*121*	**202**	*275*	**287**	*390*	**346**	470
M20	**126**	*171*	**290**	*390*	**405**	*550*	**486**	660
M22	**169**	*230*	**390**	*530*	**559**	*745*	**656**	890
M24	**217**	*295*	**497**	*375*	**708**	*960*	**840**	1140
M27	**320**	*435*	**733**	*995*	**1032**	*1400*	**1239**	1680
M30	**435**	*590*	**995**	*1350*	**1401**	*1900*	**1681**	2280
M33	**590**	*800*	**1349**	*1830*	**1902**	*2580*	**2278**	3090
M36	**759**	*1030*	**1740**	*2360*	**2441**	*3310*	**2935**	3980
M39	**988**	*1340*	**2249**	*3050*	**3163**	*4290*	**3798**	5150

The guides and ruler furnished below are designed to help you select the appropriate hardware.

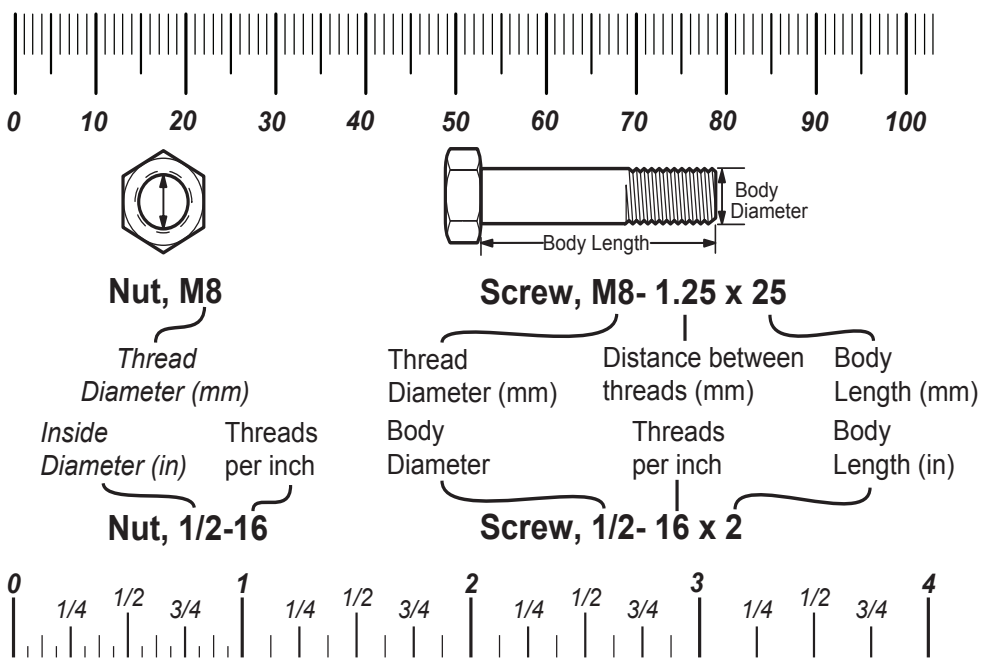

Standard Hardware Sizing

When a washer or nut is identified as **1/2"** (M8), this is the *Nominal size*, meaning the *inside diameter* is 1/2 inch (8mm metric thread diameter); if a second number is present it represents the *threads per inch* (distance between threads).

When bolt or capscrew is identified as **1/2 - 16 x 2"** (M8 - 1.25 x 50), this means the *Nominal size*, or body diameter is 1/2 inch (8mm metric thread diameter), the second number,16, represents the *threads per inch, (distance between threads).* The final number is the body length of the bolt or screw, 2 inches (50mm).

Torque Specification Chart

FOR STANDARD MACHINE HARDWARE (Tolerance ± 20%)

Hardware Grade	No Marks SAE Grade 2		SAE Grade 5		SAE Grade 8	
Size Of Hardware	*in/lbs* **ft/lbs**	Nm.	*in/lbs* **ft/lbs**	Nm.	*in/lbs* **ft/lbs**	Nm.
8-32	*19*	2.1	*30*	3.4	*41*	4.6
8-36	*20*	2.3	*31*	3.5	*43*	4.9
10-24	*27*	3.1	*43*	4.9	*60*	6.8
10-32	*31*	3.5	*49*	5.5	*68*	7.7
1/4-20	*66*	7.6	**8**	10.9	**12**	16.3
1/4-28	*76*	8.6	**10**	13.6	**14**	19.0
5/16-18	**11**	15.0	**17**	23.1	**25**	34.0
5/16-24	**12**	16.3	**19**	25.8	**29**	34.0
3/8-16	**20**	27.2	**30**	40.8	**45**	61.2
3/8-24	**23**	31.3	**35**	47.6	**50**	68.0
7/16-14	**30**	40.8	**50**	68.0	**70**	95.2
7/16-20	**35**	47.6	**55**	74.8	**80**	108.8
1/2-13	**50**	68.0	**75**	102.0	**110**	149.6
1/2-20	**55**	74.8	**90**	122.4	**120**	163.2
9/16-12	**65**	88.4	**110**	149.6	**150**	204.0
9/16-18	**75**	102.0	**120**	163.2	**170**	231.2
5/8-11	**90**	122.4	**150**	204.0	**220**	299.2
5/8-18	**100**	136	**180**	244.8	**240**	326.4
3/4-10	**160**	217.6	**260**	353.6	**386**	525.0
3/4-16	**180**	244.8	**300**	408.0	**420**	571.2
7/8-9	**140**	190.4	**400**	544.0	**600**	816.0
7/8-14	**155**	210.8	**440**	598.4	**660**	897.6
1-8	**220**	299.2	**580**	788.8	**900**	1,244.0
1-12	**240**	326.4	**640**	870.4	**1,000**	1,360.0

NOTES

1. These torque values are to be used for all hardware excluding: locknuts, self-tapping screws, thread forming screws, sheet metal screws and socket head setscrews.
2. Recommended seating torque values for locknuts:
   a. for prevailing torque locknuts - use 65% of grade 5 torques.
   b. for flange whizlock nuts and screws - use 135% of grade 5 torques.
3. Unless otherwise noted on assembly drawings, all torque values must meet this specification.

Common Hardware Types

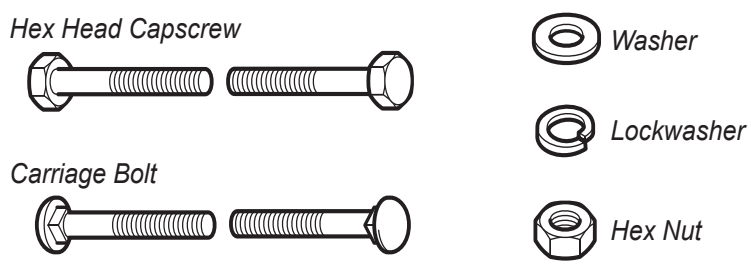

Wrench & Fastener Size Guide

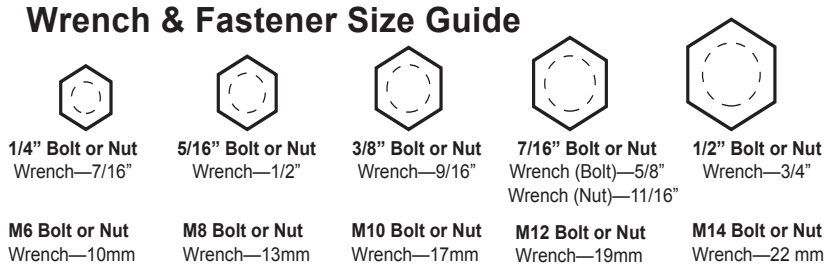

Copyright © Briggs & Stratton. All Rights reserved