Parts Manual

Mfg. No: 1010-0
5,000

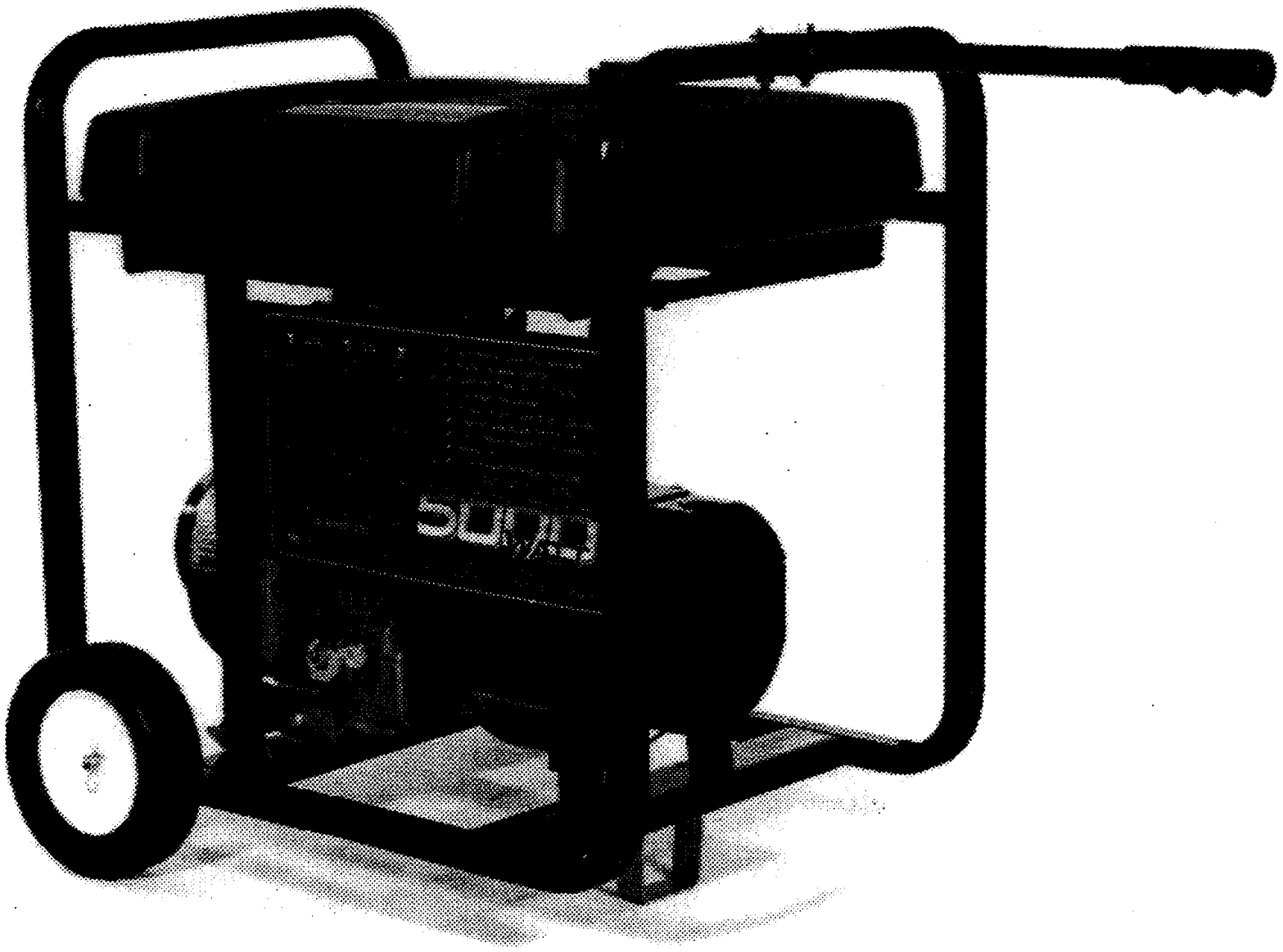

Copyright © Briggs & Stratton. All Rights reserved

Model Components

Page

Electrical Data. 4
Generator. 6
Wheel Kit. 10
Torque Specification Chart. 12

Not For Reproduction

Copyright © Briggs & Stratton. All Rights reserved

SCHEMATIC

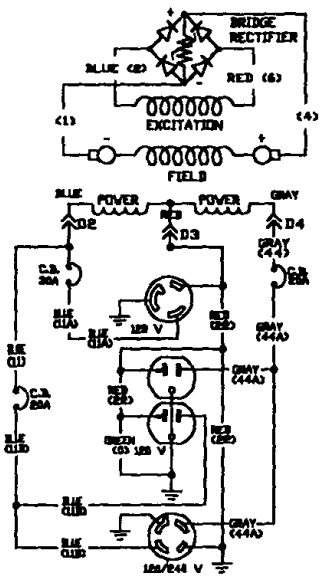

WIRING DIAGRAM

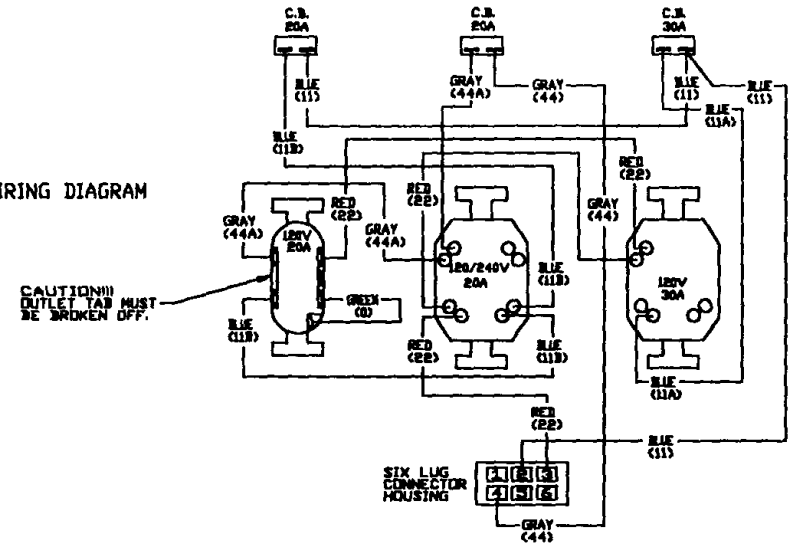

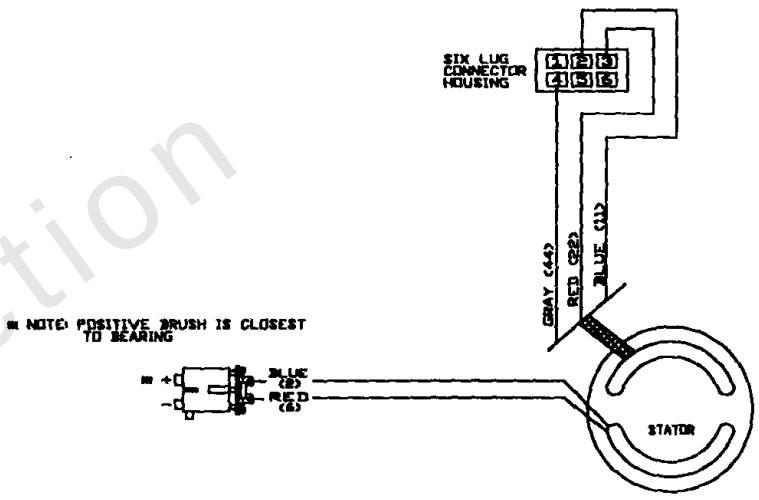

Not For Reproduction

Copyright © Briggs & Stratton. All Rights reserved

Electrical Data

REF NO	PART NO	QTY	DESCRIPTION
--	-----		Wiring Diagram/Schematic only
--	-----		WARNING - Generator Voltage Could Cause Electrical Shock or Burn Resulting in Death Or Serious Injury. To Avoid Electrical Shock Or Burn Hazard, Please Refer Service To Qualified Personnel.

Not For Reproduction

Copyright © Briggs & Stratton. All Rights reserved

Generator

Note: Unless noted otherwise, use the standard torque specifications

Mfg. No: 1010-0

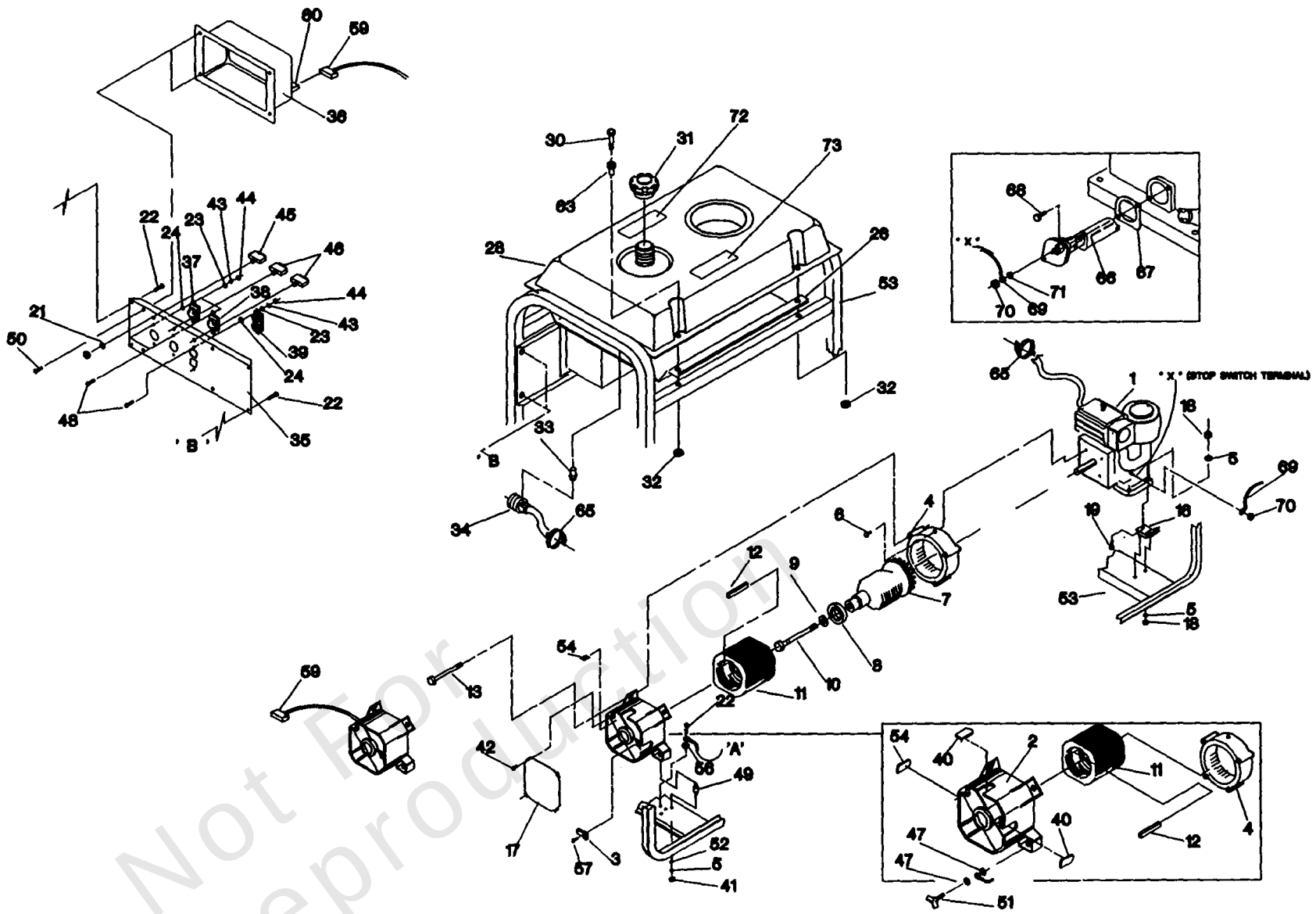

Not For Reproduction

Copyright © Briggs & Stratton. All Rights reserved

Generator

REF NO	PART NO	QTY	DESCRIPTION
1	96301	1	Briggs & Stratton 10 h.p. Engine
2	66825C	1	Rear Bearing Carrier
3	91825	1	Brush & Bridge Rectifier Ass'y.
4	66365G	1	Adaptor Housing
5	22129	8	M8 Lock Washer
6	86307	4	5/16-24 x 3/4 SEMS Hex Head Screw
7	91844	1	Rotor Assembly
8	65791	1	Bearing
9	67451	1	Special Washer
10	47480	1	Rotor Bolt
11	91859	1	Stator Assembly
12	81917	1	M4 x 10 Roll Pin
13	86308C	4	Stator Bolt
16	70642	2	45ø Vibration Mount
17	67025	1	Bearing Carrier Cover
18	52858	6	M8 - 1.25 Flange Lock Nut
19	76222	2	M8 - 1.25 x 40MM Machine Screw
20	143-53621	1	Ground Wire
21	82881	3	Internal Lock Washer
22	86292	5	#10 Self Drilling Screw
23	38150	6	#8 Flat Washer
24	23365	6	#8 Serrated Lock Washer
26	84324	1	Heat Shield
28	77374	1	5 Gal. Plastic Gas Tank
30	78831B	4	M6 x 60MM Black Capscrew
31	94834	1	Fuel Tank Cap
32	77395	4	M6 Locking Nut
33	78299	1	Plastic Tank Bushing
34	80270	1	Plastic Tank Valve
35	81897	1	Control Panel
36	81919	1	Control Panel Back
37	68868	1	120V 30A Outlet
38	68867	1	120/240, 20A Outlet
39	68759	1	120V 20A Duplex Outlet
40	84242	2	R.B.C. Grommet
41	25244	2	5/16-18 Hex Nut
42	74908	4	M5-0.80 x 10 Hex Screw
43	22264	6	#8 Lock Washer
44	51715	6	M4-0.7 Hex Nut
45	75207-A	1	30A Circuit Breaker
46	75207	2	20A Circuit Breaker
47	-----	2	1/4" Shakeproof
48	75475	6	M4-0.7 x 10 Pan Head Screw
49	82857	2	Rubber Mount
50	82308	6	Self Tapping Screw
51	86494	1	M6 x 16 Long Wing Screw
52	-----	2	WASHER, Flat, 5/16
53	93736	1	Cradle
54	67022	1	Rubber Grommet
56	22769	1	#10 Shakeproof Washer
57	66849	1	M5-0.8 x 15 Screw

Not For Reproduction

Copyright © Briggs & Stratton. All Rights reserved

Generator

Note: Unless noted otherwise, use the standard torque specifications

Mfg. No: 1010-0

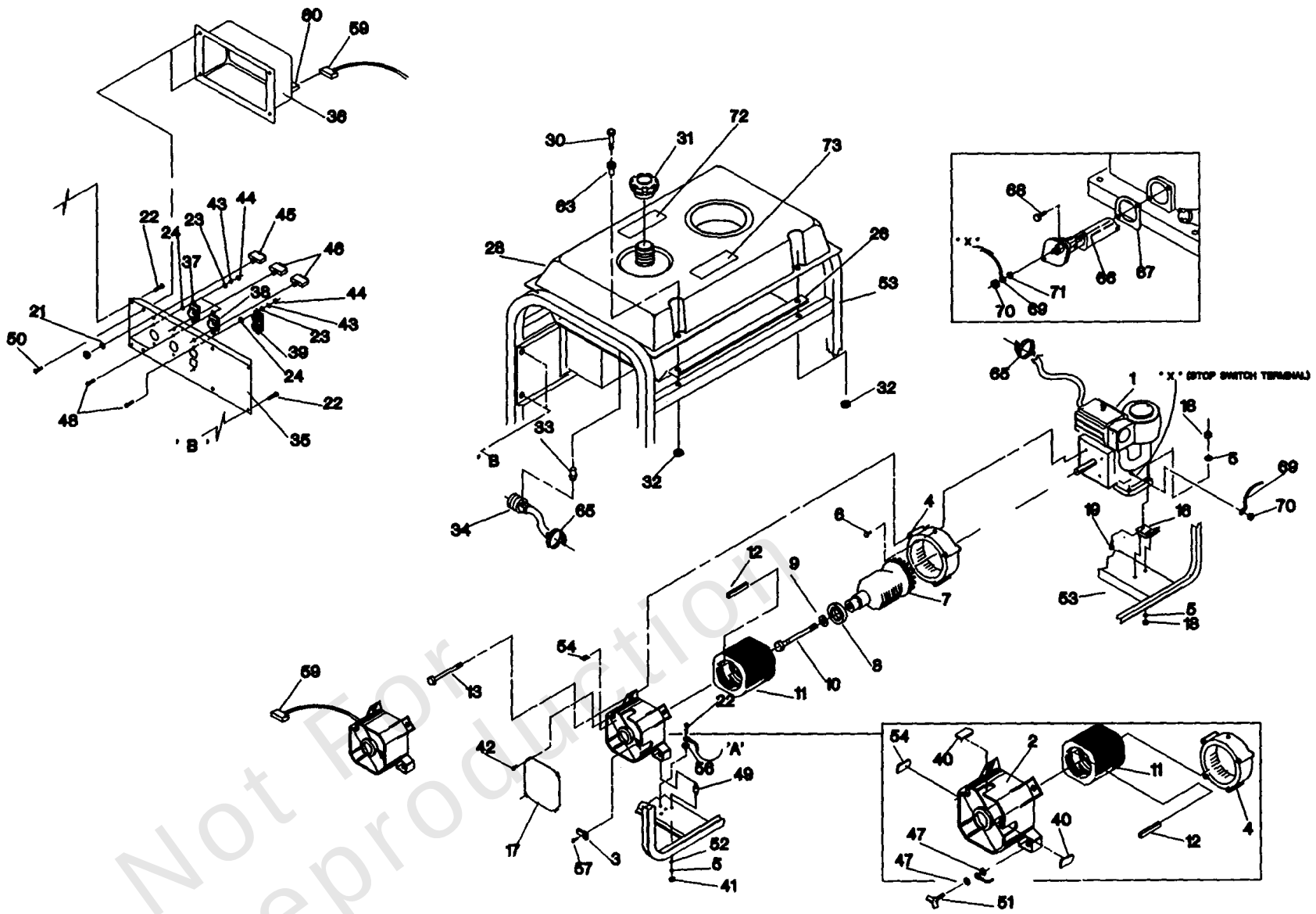

Not For Reproduction

Copyright © Briggs & Stratton. All Rights reserved

Generator

REF NO	PART NO	QTY	DESCRIPTION
59	22695	1	6-Pin Male Connector
60	22694	1	6-Pin Connector
63	83465	4	Mounting Tank Grommet
65	48031C	2	1/4" Hose Clamp
66	88977	1	Low Oil Shutdown Switch
67	91841	1	LOS Gasket
68	24679	2	#10-32 x 3/4" Taptite Screw
69	91842A	1	LOS Wire
70	22471	2	#8-32 Nut
71	23365	1	#8 Shakeproof Washer
72	92982	1	Danger Decal
73	93826	1	Start instructions Decal

Not For Reproduction

Copyright © Briggs & Stratton. All Rights reserved

Wheel Kit

Note: Unless noted otherwise, use the standard torque specifications

Mfg. No: 1010-0

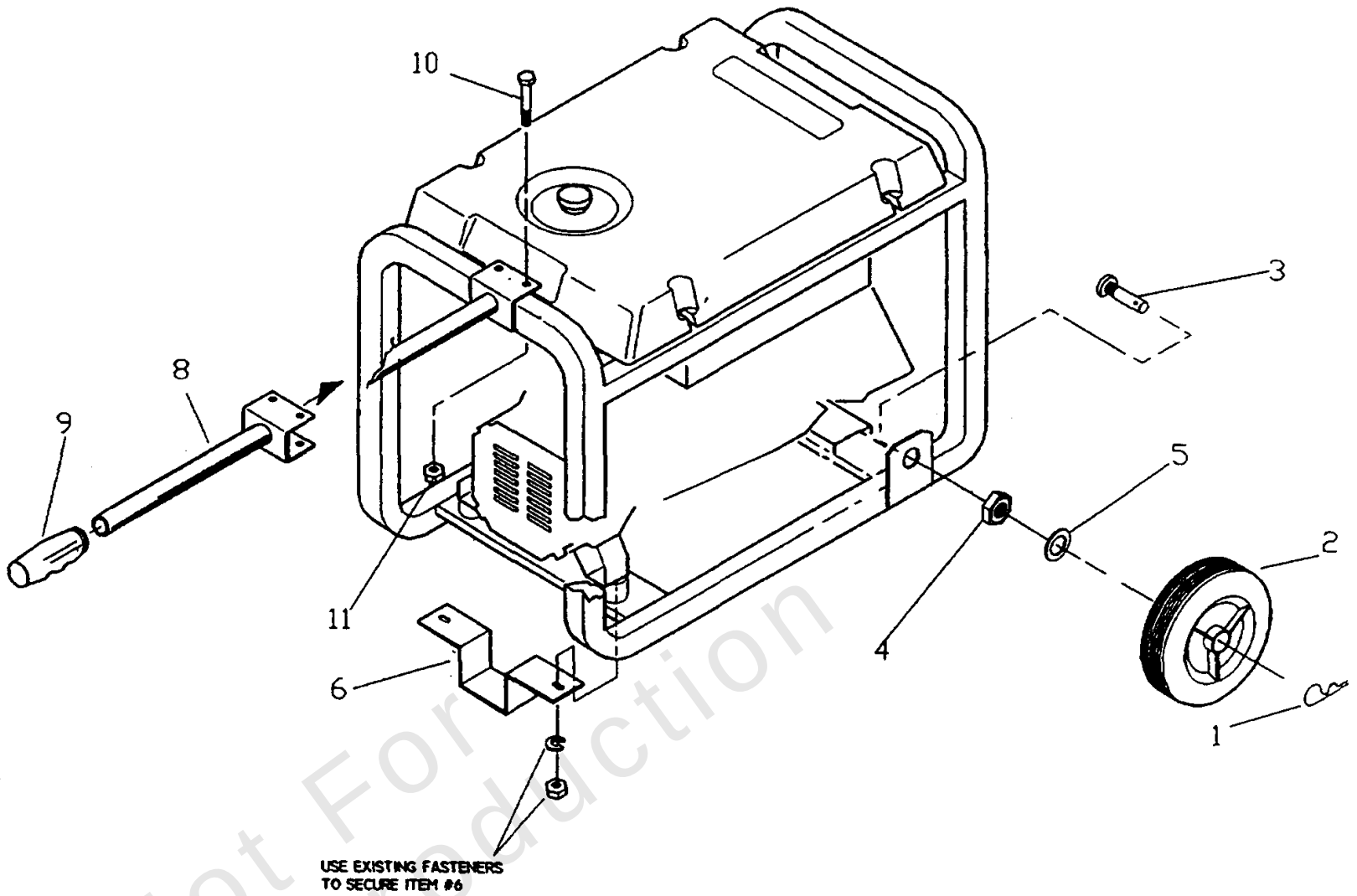

Not For Reproduction

Copyright © Briggs & Stratton. All Rights reserved

Wheel Kit

REF NO	PART NO	QTY	DESCRIPTION
1	87005A	2	Retaining Pin
2	87280	2	8" Diameter Wheel
3	93728	2	Stud Axle
4	94222Q	2	5/8-18 Lock Jam Nut
5	49808	2	Flat Washer
6	94034	1	Mounting Leg
8	84910	1	Lifting Handle
9	75928	1	Handle Grip
10	39287	2	M8 - 1.25 Hex Head Capscrew
11	52858	2	M8 - 1.25 Locking Hex Nut

Not For Reproduction

Copyright © Briggs & Stratton. All Rights reserved

Hardware Identification & Torque Specifications

Torque Specification Chart

FOR STANDARD METRIC MACHINE HARDWARE (Tolerance ± 20%)

Property Class	5.6 Class 5.6		8.8 Class 8.8		10.9 Class 10.9		12.9 Class 12.9	
Size Of Hardware	*in/lbs* **ft/lbs**	Nm.	*in/lbs* **ft/lbs**	Nm.	*in/lbs* **ft/lbs**	Nm.	*in/lbs* **ft/lbs**	Nm.
M3	*5.88*	*.56*	*13.44*	*1.28*	*19.2*	*1.80*	*22.92*	2.15
M4	*13.44*	*1.28*	*30.72*	*2.90*	*43.44*	*4.10*	*52.56*	4.95
M5	*26.4*	*2.50*	*60.96*	*5.75*	**5.97**	*8.10*	**7.15**	9.7
M6	*44.64*	*4.3*	**7.3**	*9.9*	**10.3**	*14*	**12.1**	16.5
M7	**5.2**	*7.1*	**12.1**	*16.5*	**16.9**	*23*	**19.9**	27
M8	**7.7**	*10.5*	**17.7**	*24*	**25**	*34*	**29**	40
M10	**15**	*21*	**35**	*48*	**50**	*67*	**59**	81
M12	**26**	*36*	**61**	*83*	**86.2**	*117*	**103**	140
M14	**42**	*58*	**101**	*132*	**136**	*185*	**162**	220
M16	**64**	*88*	**147**	*200*	**210**	*285*	**250**	340
M18	**89**	*121*	**202**	*275*	**287**	*390*	**346**	470
M20	**126**	*171*	**290**	*390*	**405**	*550*	**486**	660
M22	**169**	*230*	**390**	*530*	**559**	*745*	**656**	890
M24	**217**	*295*	**497**	*375*	**708**	*960*	**840**	1140
M27	**320**	*435*	**733**	*995*	**1032**	*1400*	**1239**	1680
M30	**435**	*590*	**995**	*1350*	**1401**	*1900*	**1681**	2280
M33	**590**	*800*	**1349**	*1830*	**1902**	*2580*	**2278**	3090
M36	**759**	*1030*	**1740**	*2360*	**2441**	*3310*	**2935**	3980
M39	**988**	*1340*	**2249**	*3050*	**3163**	*4290*	**3798**	5150

The guides and ruler furnished below are designed to help you select the appropriate hardware.

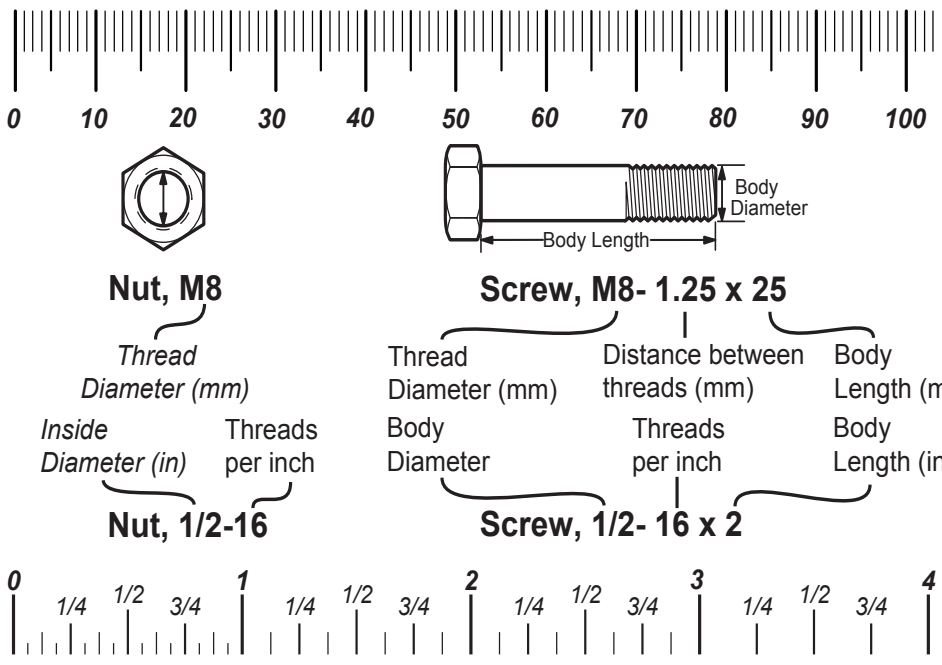

Standard Hardware Sizing

When a washer or nut is identified as **1/2"** (M8), this is the *Nominal size*, meaning the *inside diameter* is 1/2 inch (8mm metric thread diameter); if a second number is present it represents the *threads per inch* (distance between threads).

When bolt or capscrew is identified as **1/2 - 16 x 2"** (M8 - 1.25 x 50), this means the *Nominal size*, or body diameter is 1/2 inch (8mm metric thread diameter), the second number,16, represents the *threads per inch, (distance between threads).* The final number is the body length of the bolt or screw, 2 inches (50mm).

Torque Specification Chart

FOR STANDARD MACHINE HARDWARE (Tolerance ± 20%)

Hardware Grade	No Marks SAE Grade 2		SAE Grade 5		SAE Grade 8	
Size Of Hardware	*in/lbs* **ft/lbs**	Nm.	*in/lbs* **ft/lbs**	Nm.	*in/lbs* **ft/lbs**	Nm.
8-32	*19*	2.1	*30*	3.4	*41*	4.6
8-36	*20*	2.3	*31*	3.5	*43*	4.9
10-24	*27*	3.1	*43*	4.9	*60*	6.8
10-32	*31*	3.5	*49*	5.5	*68*	7.7
1/4-20	*66*	7.6	**8**	10.9	**12**	16.3
1/4-28	*76*	8.6	**10**	13.6	**14**	19.0
5/16-18	**11**	15.0	**17**	23.1	**25**	34.0
5/16-24	**12**	16.3	**19**	25.8	**29**	34.0
3/8-16	**20**	27.2	**30**	40.8	**45**	61.2
3/8-24	**23**	31.3	**35**	47.6	**50**	68.0
7/16-14	**30**	40.8	**50**	68.0	**70**	95.2
7/16-20	**35**	47.6	**55**	74.8	**80**	108.8
1/2-13	**50**	68.0	**75**	102.0	**110**	149.6
1/2-20	**55**	74.8	**90**	122.4	**120**	163.2
9/16-12	**65**	88.4	**110**	149.6	**150**	204.0
9/16-18	**75**	102.0	**120**	163.2	**170**	231.2
5/8-11	**90**	122.4	**150**	204.0	**220**	299.2
5/8-18	**100**	136	**180**	244.8	**240**	326.4
3/4-10	**160**	217.6	**260**	353.6	**386**	525.0
3/4-16	**180**	244.8	**300**	408.0	**420**	571.2
7/8-9	**140**	190.4	**400**	544.0	**600**	816.0
7/8-14	**155**	210.8	**440**	598.4	**660**	897.6
1-8	**220**	299.2	**580**	788.8	**900**	1,244.0
1-12	**240**	326.4	**640**	870.4	**1,000**	1,360.0

NOTES

1. These torque values are to be used for all hardware excluding: locknuts, self-tapping screws, thread forming screws, sheet metal screws and socket head setscrews.
2. Recommended seating torque values for locknuts:
   a. for prevailing torque locknuts - use 65% of grade 5 torques.
   b. for flange whizlock nuts and screws - use 135% of grade 5 torques.
3. Unless otherwise noted on assembly drawings, all torque values must meet this specification.

Common Hardware Types

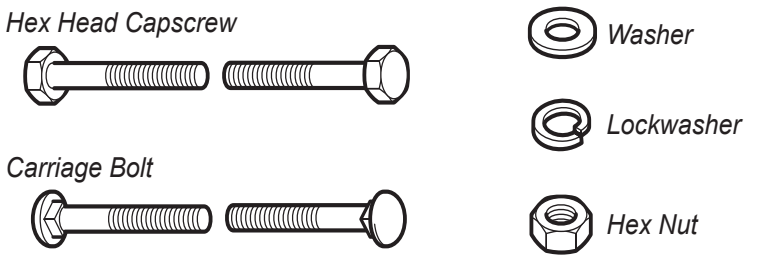

Wrench & Fastener Size Guide

1/4" Bolt or Nut Wrench—7/16"

5/16" Bolt or Nut Wrench—1/2"

3/8" Bolt or Nut Wrench—9/16"

7/16" Bolt or Nut Wrench (Bolt)—5/8" Wrench (Nut)—11/16"

1/2" Bolt or Nut Wrench—3/4"

M6 Bolt or Nut Wrench—10mm

M8 Bolt or Nut Wrench—13mm

M10 Bolt or Nut Wrench—17mm

M12 Bolt or Nut Wrench—19mm

M14 Bolt or Nut Wrench—22 mm

Copyright © Briggs & Stratton. All Rights reserved