Parts Manual

Mfg. No: 386777-0007-G1

Copyright © Briggs & Stratton. All Rights reserved

Model Components — Page

Air Cleaner,. . . . 4
Alternator, Controls, Ignition, overnor Spring. . . . 8
Blower Housing, Flywheel, Rewind Starter. . . . 12
Carburetor. . . . 14
Carburetor, Fuel Supply, Intake Manifold,. . . . 16
Crankshaft, Cylinder, Sump, Piston, Rings, Connecting Rod, Cam Shaft. . . . 20
Cylinder Head, Valves. . . . 24
Electric Starter. . . . 26
Exhaust System, Oil Lubrication, Filter, and Cooler. . . . 28
Kit-Carburetor Overhaul, Gasket Engine & Valve Set. . . . 30
Replacement Engine - US & Canada. . . . 32
Shrouds, Carburetor Cover. . . . 33
Model 29, 30, 35 & 38 Engine Accessories Catalog. . . . 35
- Maintenance Kits. . . . 36
- Lubrication. . . . 38
- Starter Motor Side Outlet Mufflers. . . . 40
- Oil Filter Side Outlet Mufflers. . . . 42
- Oil Filter Side Outlet Manifolds. . . . 44
- Starter Motor Side Outlet Manifolds. . . . 46
- Mufflers. . . . 48
- Center Outlet Mufflers. . . . 50
- Muffler Guards and Shields. . . . 52
- Spark Arrestors and Deflectors. . . . 54
- Muffler Mounting Hardware. . . . 56
- Flywheel and Air Intake Guards. . . . 58
- PTO. . . . 60
- Electrical. . . . 62
- Speed Control. . . . 64

Not For Reproduction

Copyright © Briggs & Stratton. All Rights reserved

Air Cleaner,

Mfg. No: 386777-0007-G1

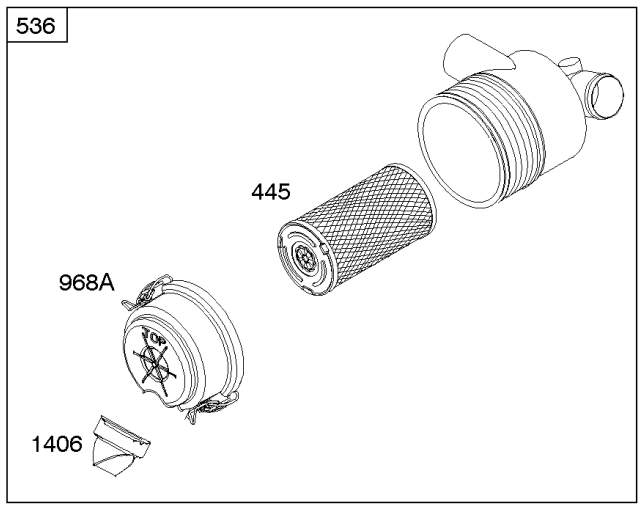

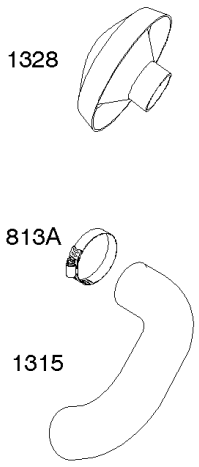

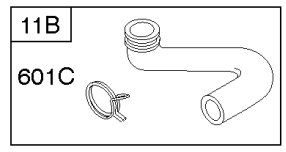

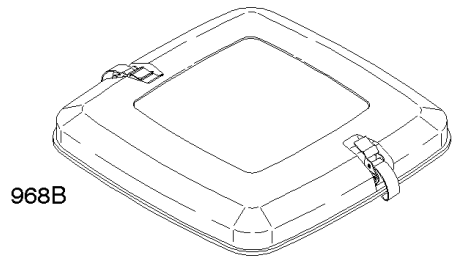

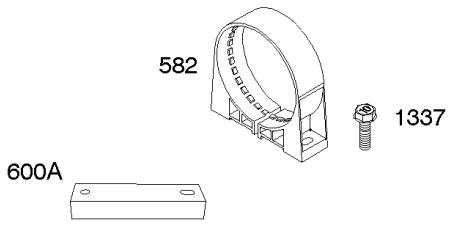

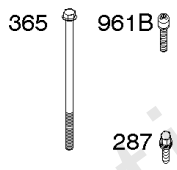

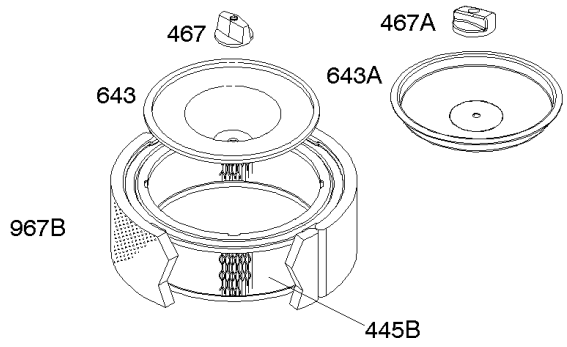

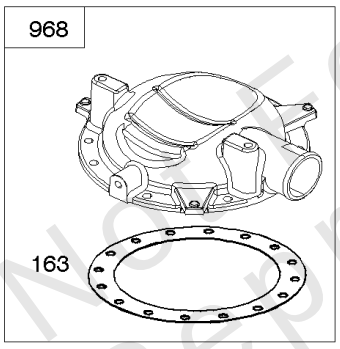

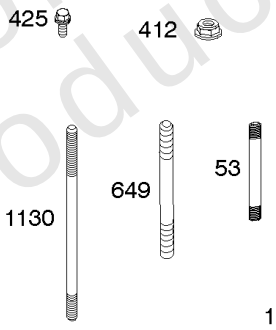

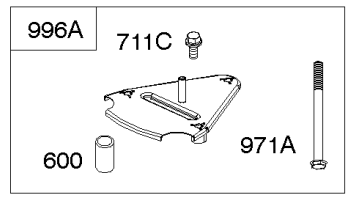

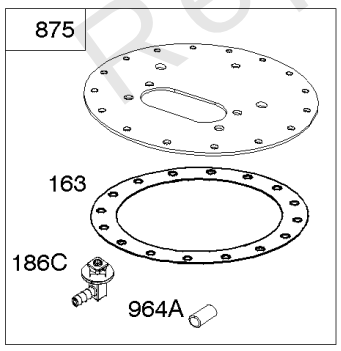

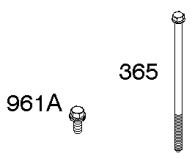

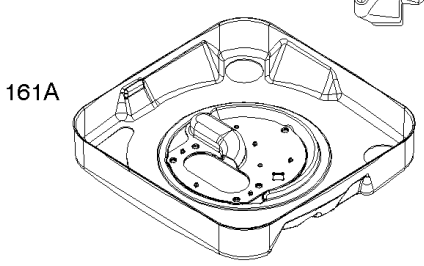

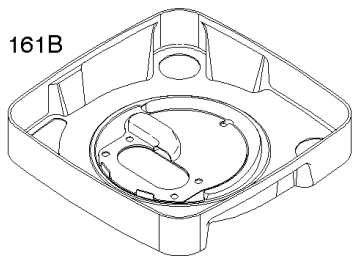

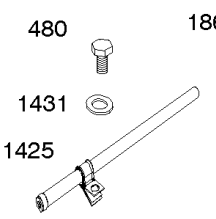

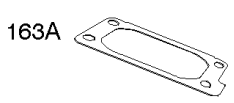

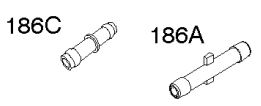

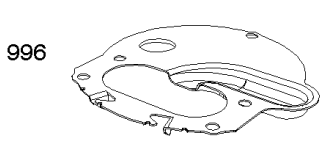

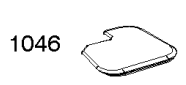

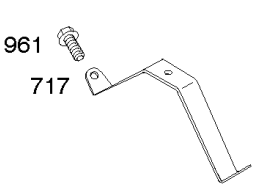

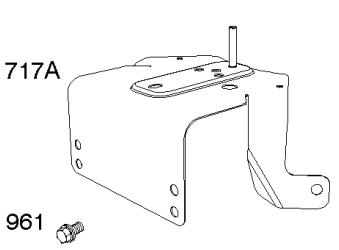

Not for Reproduction

Copyright © Briggs & Stratton. All Rights reserved

Air Cleaner,

REF NO	PART NO	QTY	DESCRIPTION
11B	806379		TUBE, Breather
53	690869		STUD -(Carburetor)
161B	808676		BASE, Air Cleaner
163	841823		GASKET, Air Cleaner -(Air Cleaner)
163A	692087		GASKET, Air Cleaner -(Used With Metal Air Cleaner Base)
171	690941		NUT -(Air Cleaner) (M8)
185	690939		NUT -(Air Cleaner Base) (Air Cleaner Base)
186A	845121		CONNECTOR, Hose
186B	845141		CONNECTOR, Hose
287	807084		SCREW -(Dipstick Tube) (M6x14mm)
365	690866		SCREW -(Carburetor/Throttle Body) (M6x85mm)
412	690941		NUT -(Air Cleaner Cover) (M8)
425	691593		SCREW -(Air Cleaner Cover) (M6x12mm)
445	820263		FILTER, A/C Cartridge -(Round)
445B	692519		FILTER, A/C Cartridge -(Round)
467	691985		KNOB, Air Cleaner Cover
467A	844618		KNOB, Air Cleaner Cover
536	825117		CLEANER, Air
582	807381		CLAMP, Air Cleaner
600	845213		SPACER, Air Cleaner
600A	843564		SPACER, Air Cleaner
601C	691145		CLAMP, Hose -(Silver)
643	692079		RETAINER, Air Filter
643A	844932		RETAINER, Air Cleaner
649	842446		STUD -(Air Cleaner Cover) (M8x63mm)
711C	691492		SCREW -(Carburetor Shield)
813A	807377		CLAMP
961	807084		SCREW -(Air Cleaner Bracket) (M6x14mm)
961	691593		SCREW -(Air Cleaner Bracket) (M6x12mm)
961	841233		SCREW -(Air Cleaner Bracket) (M6x10mm)
961B	807120		SCREW -(Air Cleaner Bracket)
964A	807468		CAP, Carburetor
967B	692520		FILTER, Pre Cleaner -(Round)
968	841822		COVER, Air Cleaner
968A	842620		COVER, Air Cleaner
968B	808654		COVER, Air Cleaner -(Used With Metal Air Cleaner Base)
996A	845543		SHIELD-CARBURETOR

Not For Reproduction

Copyright © Briggs & Stratton. All Rights reserved

Air Cleaner,

Mfg. No: 386777-0007-G1

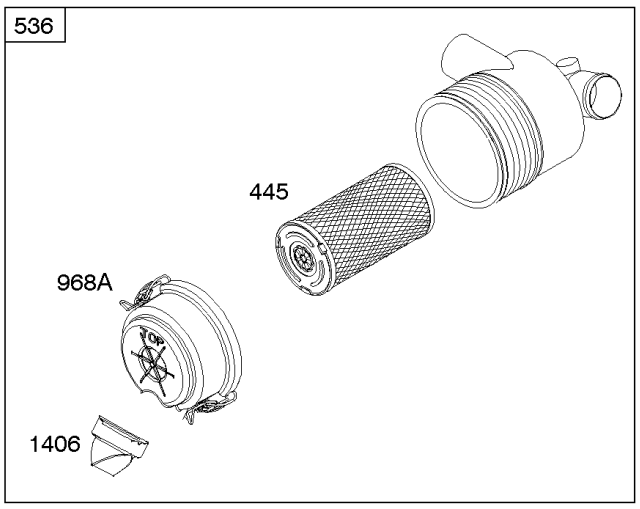

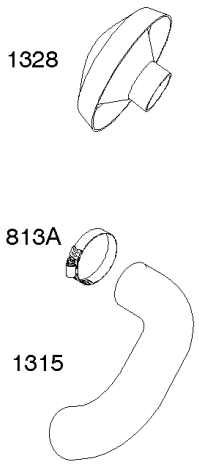

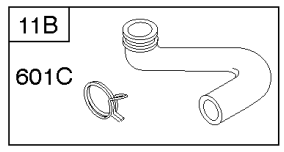

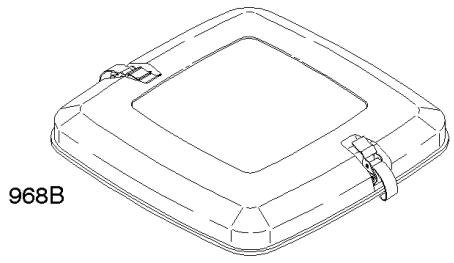

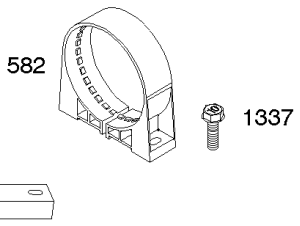

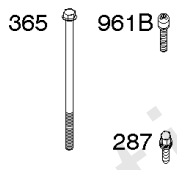

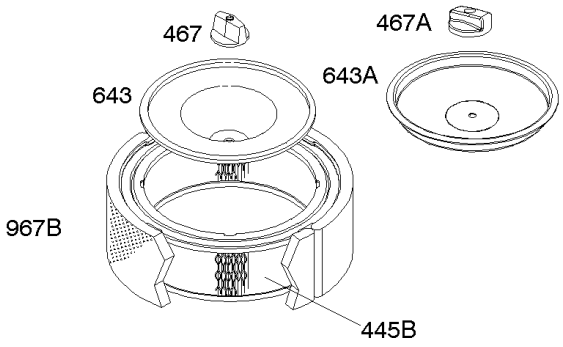

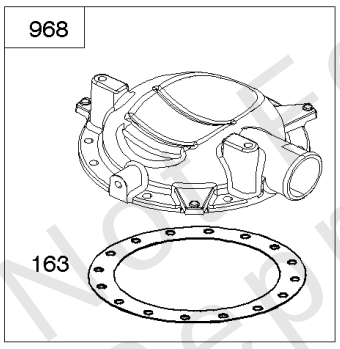

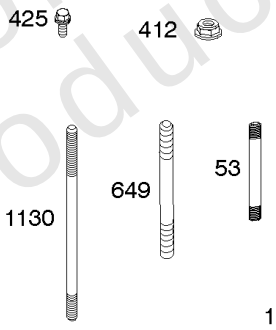

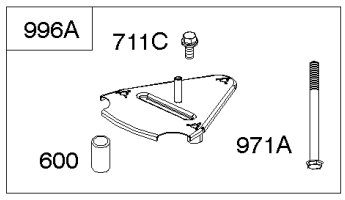

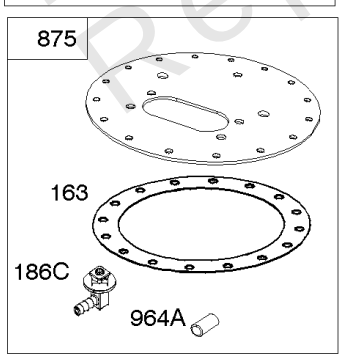

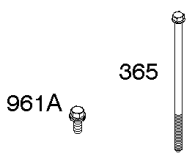

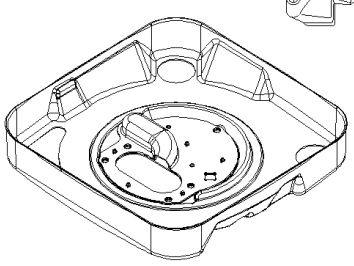

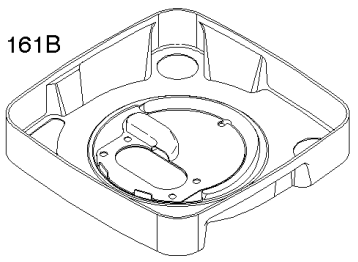

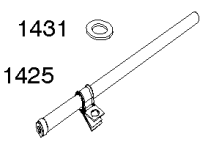

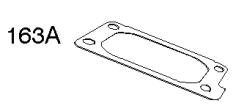

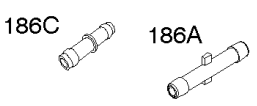

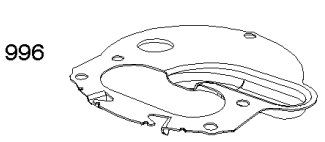

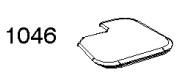

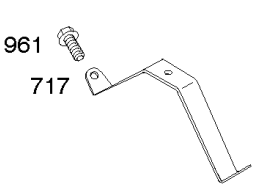

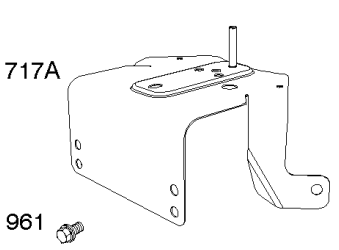

Not for Reproduction

Copyright © Briggs & Stratton. All Rights reserved

Air Cleaner,

REF NO	PART NO	QTY	DESCRIPTION
1004B	690865		DUCT, Air -(Used With Metal Air Cleaner Base)
1046	841165		PLUG, Blower Housing
1130	842448		STUD -(Intake Manifold)
1130	690869		STUD -(Intake Manifold)
1315	842445		HOSE, Air Cleaner
1337	841233		SCREW -(Air Cleaner Clamp) (M6x10mm)
1406	842623		VALVE, Debris
1425	844712		HOSE, Purge Line -(Cut To Required Length)
1431	844035		WASHER -(Tube Clamp)

Not For Reproduction

Copyright © Briggs & Stratton. All Rights reserved

Alternator, Controls, Ignition, overnor Spring

Mfg. No: 386777-0007-G1

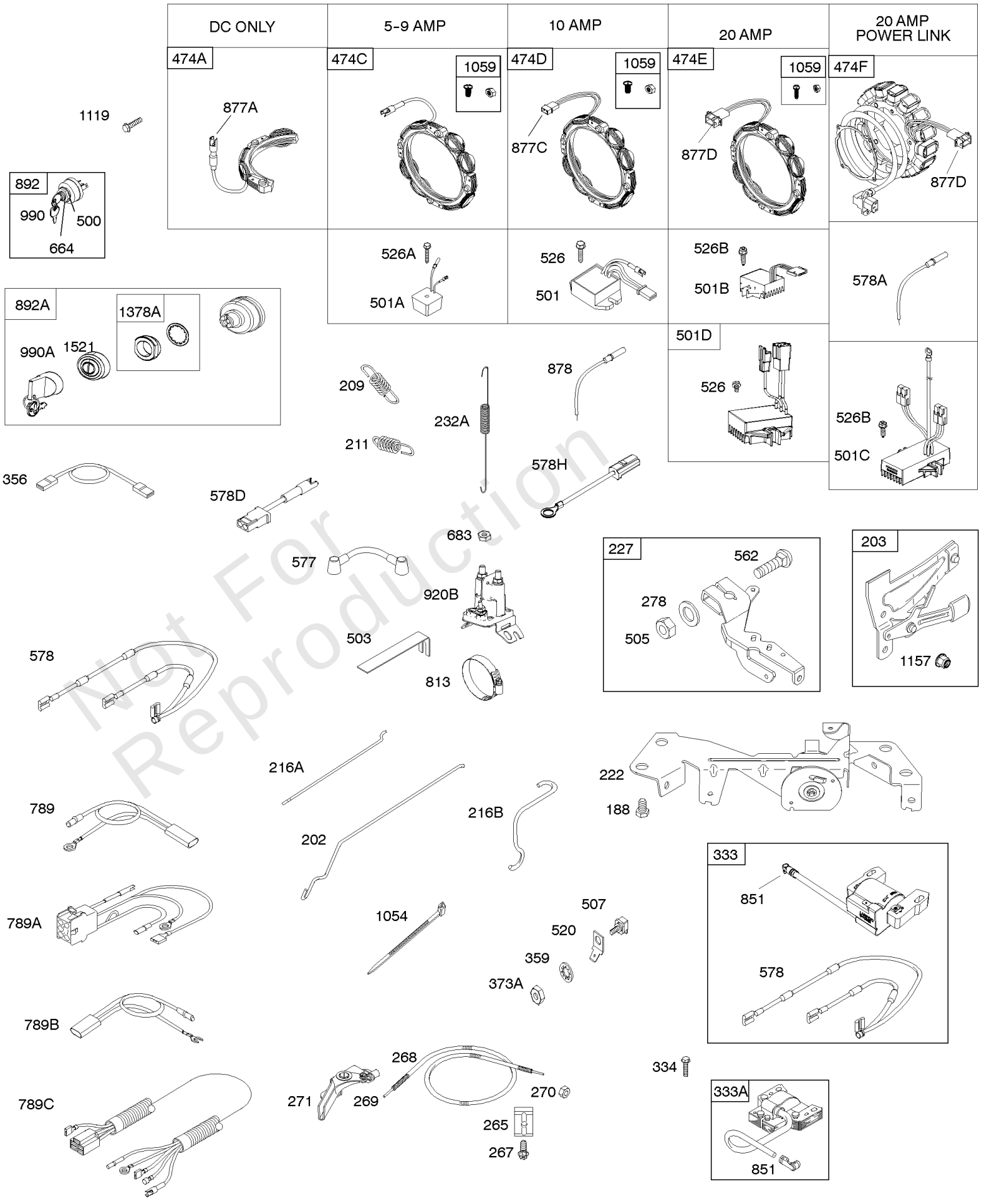

Not For Reproduction

Alternator, Controls, Ignition, overnor Spring

REF NO	PART NO	QTY	DESCRIPTION
20	805049S		SEAL, Oil -(PTO Side)
188	692056		SCREW -(Control Bracket) (M8x14mm)
188	692062		SCREW -(Control Bracket) (M8x18mm)
202	690867		LINK, Mechanical Governor
203	808753		CRANK, Bell
209	690710		SPRING, Governor
211	692069		SPRING, Governed Idle
216A	690871		LINK, Choke
216B	691542		LINK, Choke
222	845305		BRACKET, Control
227	690236		LEVER, Governor Control
232A	690874		SPRING/LINK, Governor
265	691024		CLAMP, Casing
267	692083		SCREW -(Casing Clamp) (M5x12mm)
267	841552		SCREW -(Casing Clamp) (M5x20mm)
268	691025		CASING, Control Wire -(Cut To Required Length)
269	691026		WIRE, Control -(Cut To Required Length)
270	691027		NUT -(Control Wire Casing)
271	691028		LEVER, Control
278	842122		WASHER -(Governor Control Lever)
333	845606		ARMATURE, Magneto -Used After Code Date 09100700
333A	591459		ARMATURE-MAGNETO -Used Before Code Date 09100800
334	692066		SCREW -(Magneto Armature)
359	691077		WASHER -(Ground Terminal)
373A	691612		NUT -(Ground Terminal)
474D	592830		ALTERNATOR -(10-16 Amp Regulated)
500	691086		WASHER -(Key Switch)
501	845907		REGULATOR
503	845016		STRAP, Starter -(60mm)
505	690238		NUT -(Governor Lever)
507	691972		INSULATOR
520	691084		TERMINAL, Ground
526	692067		SCREW -(Regulator) (M6x12mm)
526A	690717		SCREW -(Regulator) (M6x30mm)
526B	691547		SCREW -(Regulator) (M6x28mm)
562	690239		BOLT -(Governor Control Lever)

Not For Reproduction

Copyright © Briggs & Stratton. All Rights reserved

Alternator, Controls, Ignition, overnor Spring

Mfg. No: 386777-0007-G1

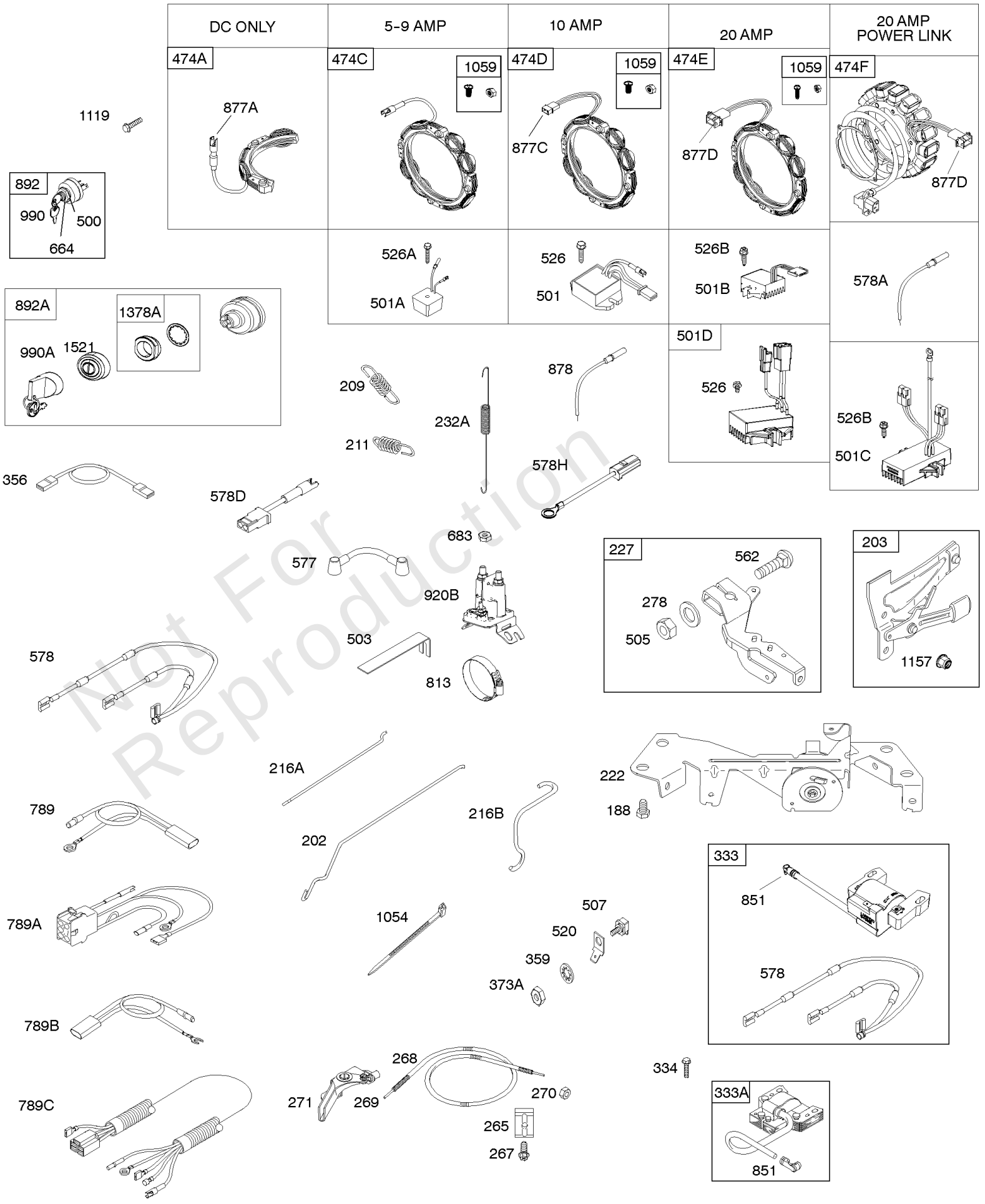

Not For Reproduction

Alternator, Controls, Ignition, overnor Spring

REF NO	PART NO	QTY	DESCRIPTION
577	690795		CABLE, Starter
578	844547		HARNESS, Wiring -(With Diodes) -Used After Code Date 09100700
578A	692319		WIRE ASSEMBLY -(With Diodes) -Used Before Code Date 09100800
664	691087		NUT -(Key Switch)
683	691029		NUT -(Starter Solenoid) (1/4-20)
683	845758		NUT -(Starter Solenoid) (M6)
789A	698332		HARNESS, Wiring
813	690635		CLAMP
851	493880S		TERMINAL-SPARK PLUG
877C	399916		WIRE/CONN-ALTERNATOR -(2 Wires, 7-53/64)(2 Bare Wire Ends, And Insulated Snap ConnectMale Pin Terminal)
877D	698092		WIRE/CONNECTOR, Alternator
892	692318		SWITCH, Key
920B	846820		SOLENOID, Starter
990	691959		SET, Key
990A	847146		SET, Key
1054	280275		TIE, Cable
1059	698516		KIT, Screw/Washer
1119	691552		SCREW -(Alternator)
1157	690713		NUT -(Bell Crank)
1378A	847144		SET, Washer/Nut
1521	847150		CAP, Switch

Not For Reproduction

Copyright © Briggs & Stratton. All Rights reserved

Blower Housing, Flywheel, Rewind Starter

Mfg. No: 386777-0007-G1

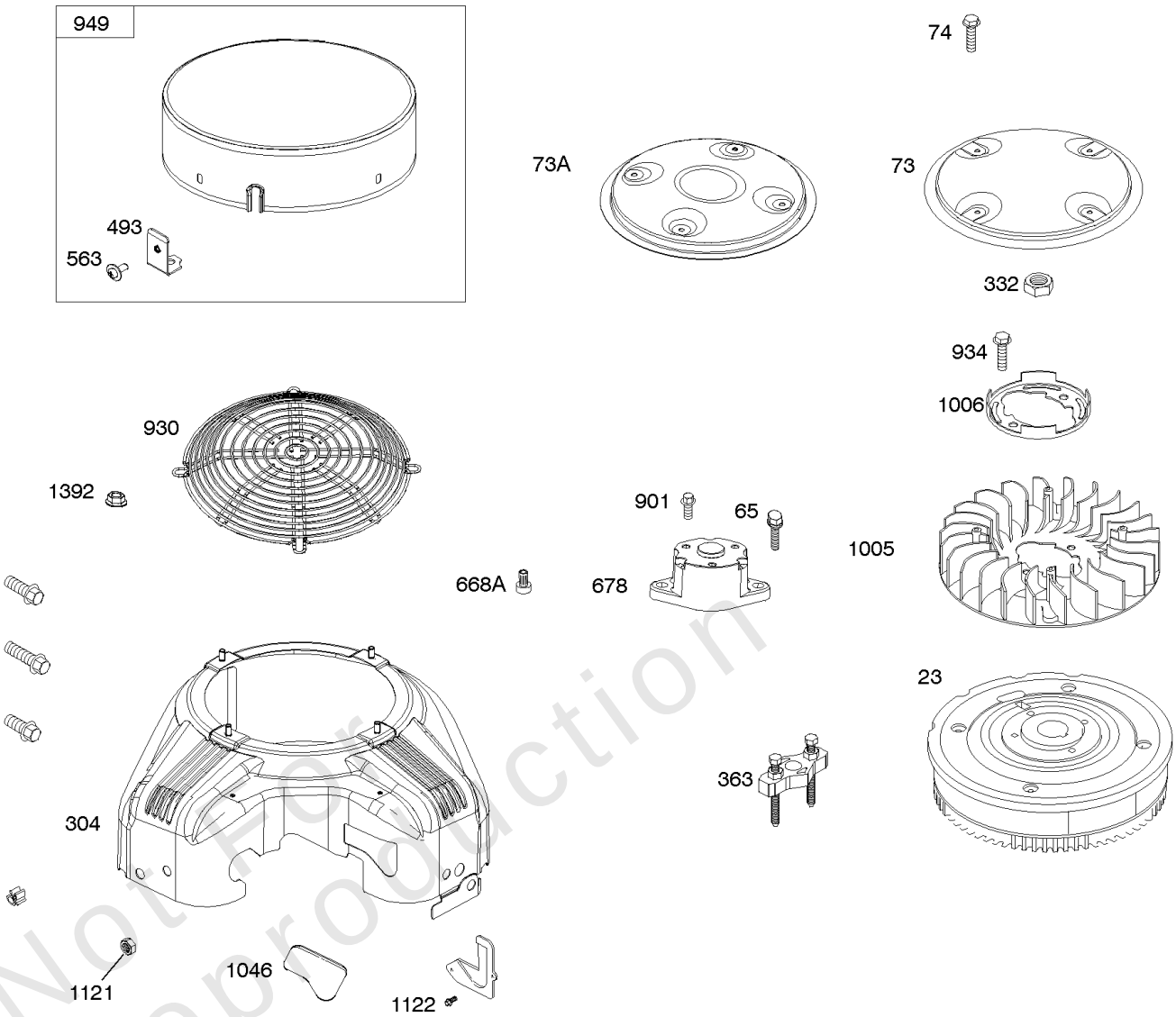

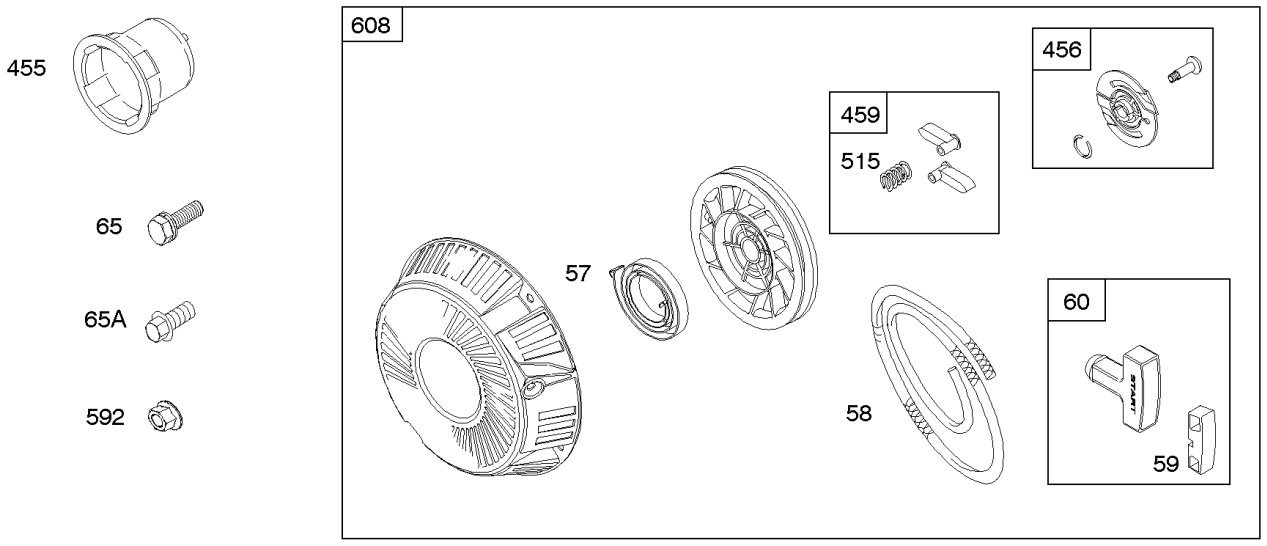

Not For Reproduction

Blower Housing, Flywheel, Rewind Starter

REF NO	PART NO	QTY	DESCRIPTION
23	809236		FLYWHEEL
57	692086		SPRING, Rewind Starter
58	66574		ROPE, Starter
59	805957		INSERT, Grip
60	808167		GRIP, Starter Rope
65	690341		SCREW -(Rewind Starter) (Rewind Starter)
65A	841233		SCREW -(Rewind Starter) (M6x10mm)
73	841440		SCREEN, Rotating
73A	841662		SCREEN, Rotating
74	841441		SCREW -(Rotating Screen)
304	841489		HOUSING, Blower
305	692056		SCREW -(Blower Housing) (M8x14mm)
305A	692062		SCREW -(Blower Housing) (18mm Long)
305B	841233		SCREW -(Blower Housing) (12mm Long)
332	690887		NUT -(Flywheel)
363	19203		PULLER, Flywheel
455	841794		CUP, Flywheel
456	845219		PLATE, Pawl Friction
459	845218		PAWL, Ratchet
493	845729		BRACKET, Mounting
515	691528		SPRING, Pawl
563	841735		SCREW -(Debris Screen Guard)
592	690939		NUT -(Rewind Starter) (M6)
608	841729		STARTER, Rewind
668A	691500		SPACER -(Knurled Insert)
678	841730		SPACER -(Rewind)
729B	690586		CLIP, Wire -(Snap In)(Nylon)
901	841735		SCREW -(Rewind Spacer)
930	846284		GUARD, Flywheel Fan
934	691058		SCREW -(Fan Retainer)
949	845728		GUARD, Debris Screen
1005	841439		FAN, Flywheel
1006	690452		RETAINER, Fan
1046	841165		PLUG, Blower Housing
1121	810056		NUT -(Fuel Pump Bracket)
1122	93410		SCREW -(Blower Housing Adapter)
1392	690939		NUT -(Rewind Guard)

Not For Reproduction

Copyright © Briggs & Stratton. All Rights reserved

Mfg. No: 386777-0007-G1

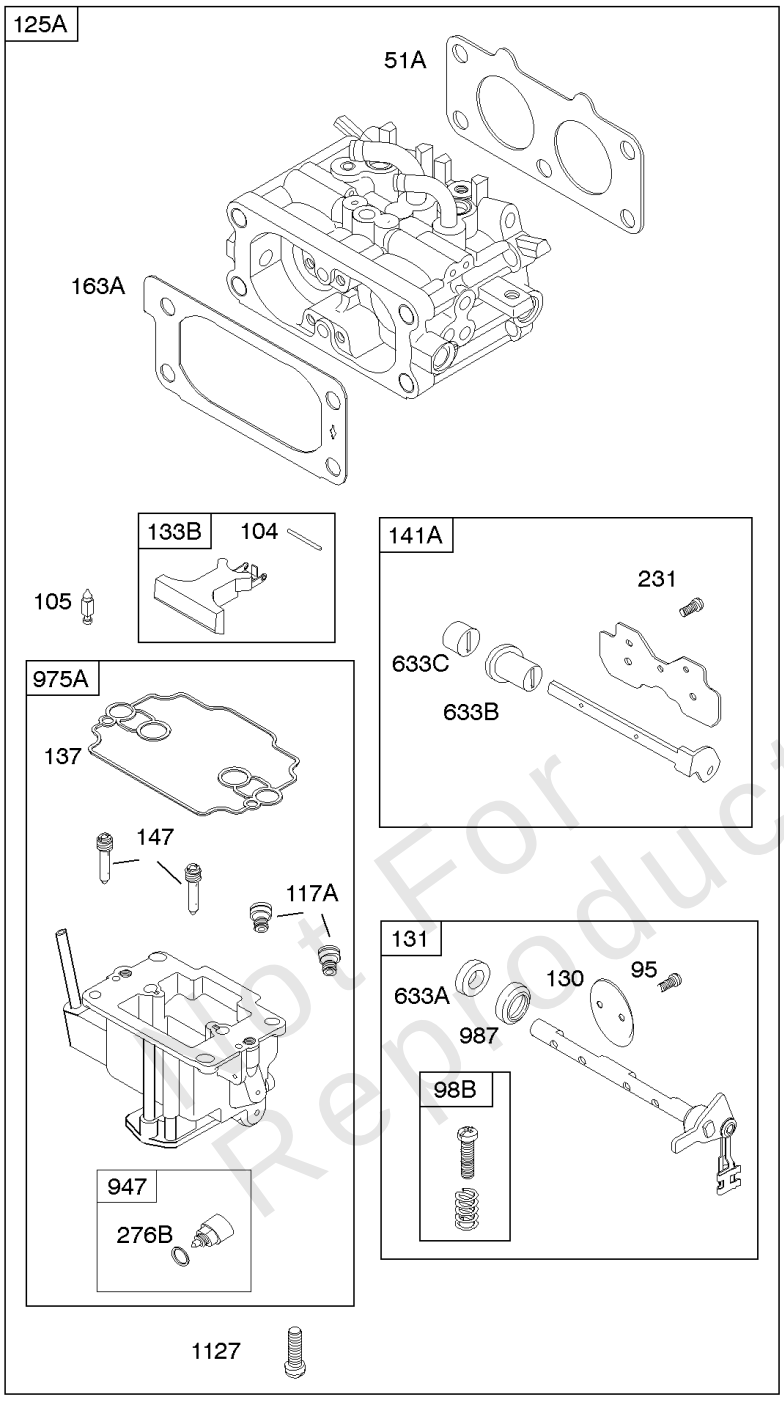

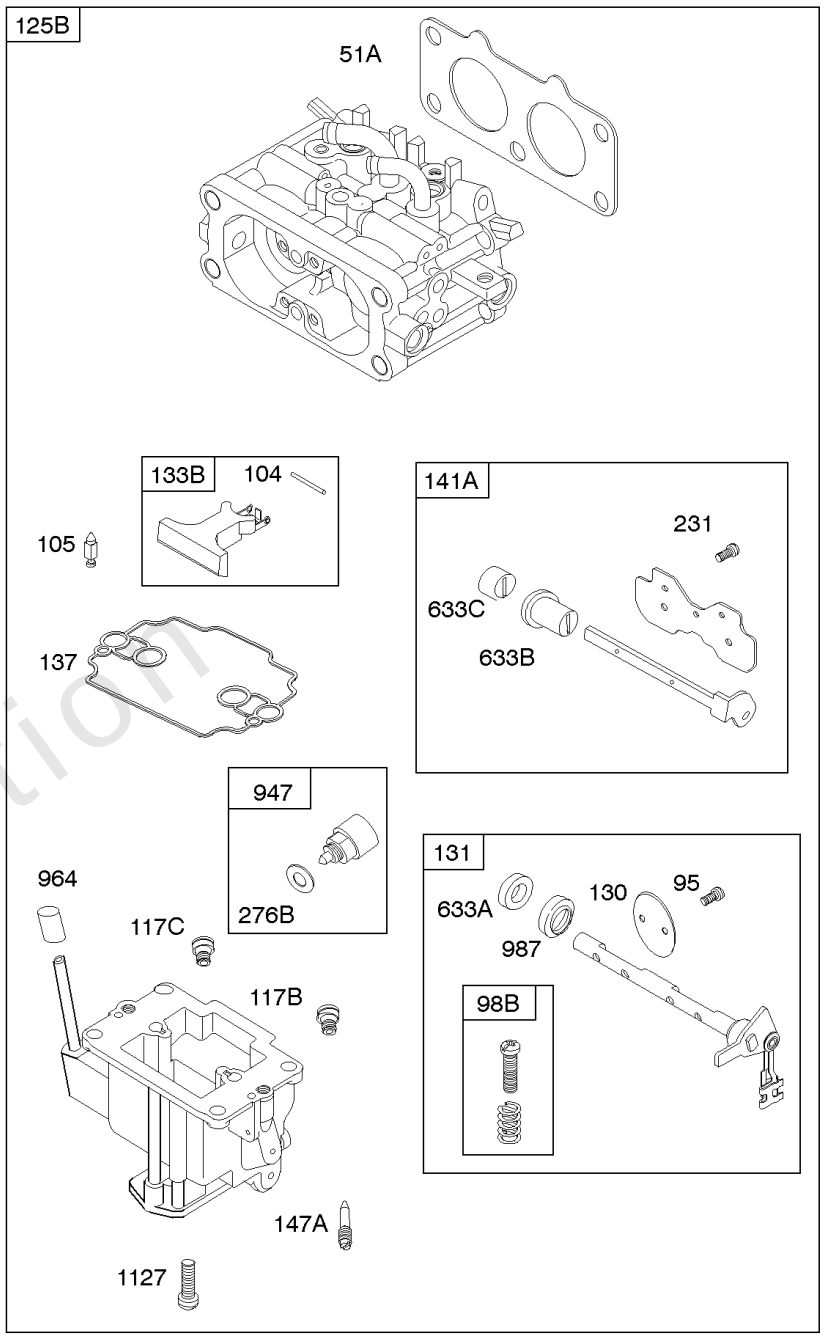

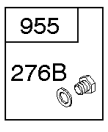

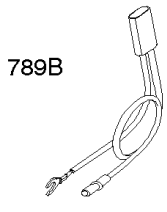

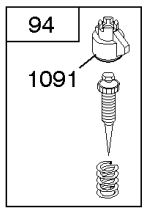

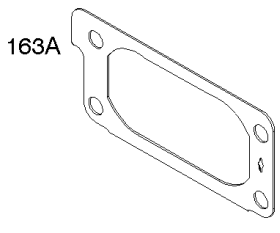

Not For Reproduction

Copyright © Briggs & Stratton. All Rights reserved

Carburetor

REF NO	PART NO	QTY	DESCRIPTION
51A	690950		GASKET, Intake
94	842883		KIT, Idle Mixture
95	690718		SCREW -(Throttle Valve)
98B	809716		KIT, Idle Speed
104	690739		PIN, Float Hinge
105	809759		VALVE, Float Needle
117A	809635		JET, Main -(Standard) -Used After Code Date 09122300
118	809723		JET, Main -(High Altitude) -Used Before Code Date 09122400
118A	809708		JET, Main -(High Altitude) (9000 Feet and Above) -Used After Code Date 09122300
118A	842153		JET, Main -(High Altitude) (5000 > 9000 Feet) -Used After Code Date 09122300
125A	844370		CARBURETOR -Used After Code Date 09122300
130	809642		VALVE, Throttle
131	809718		KIT, Throttle Shaft
133B	809637		FLOAT, Carburetor
137	809645		GASKET, Float Bowl
147	809709		NOZZLE, Carburetor
147A	845727		JET, Pilot
163A	692087		GASKET, Air Cleaner -(Used With Metal Air Cleaner Base)
231	690718		SCREW -(Choke Valve)
276B	806476		WASHER, Sealing -(Float Bowl)
633A	809641		SEAL, Choke/Throttle Shaft
633B	809638		SEAL, Choke/Throttle Shaft
633C	809644		SEAL, Choke/Throttle Shaft
947	842109		SOLENOID, Fuel
955	691511		PLUG, Carburetor -(M8)
964	590799		CAP, Connector
975A	844947		BOWL, Float
987	809639		SEAL, Choke/Throttle Shaft
1091	691515		CAP, Limiter
1127	809715		SCREW -(Float Bowl to Carburetor Body)

Not For Reproduction

Copyright © Briggs & Stratton. All Rights reserved

Carburetor, Fuel Supply, Intake Manifold,

Mfg. No: 386777-0007-G1

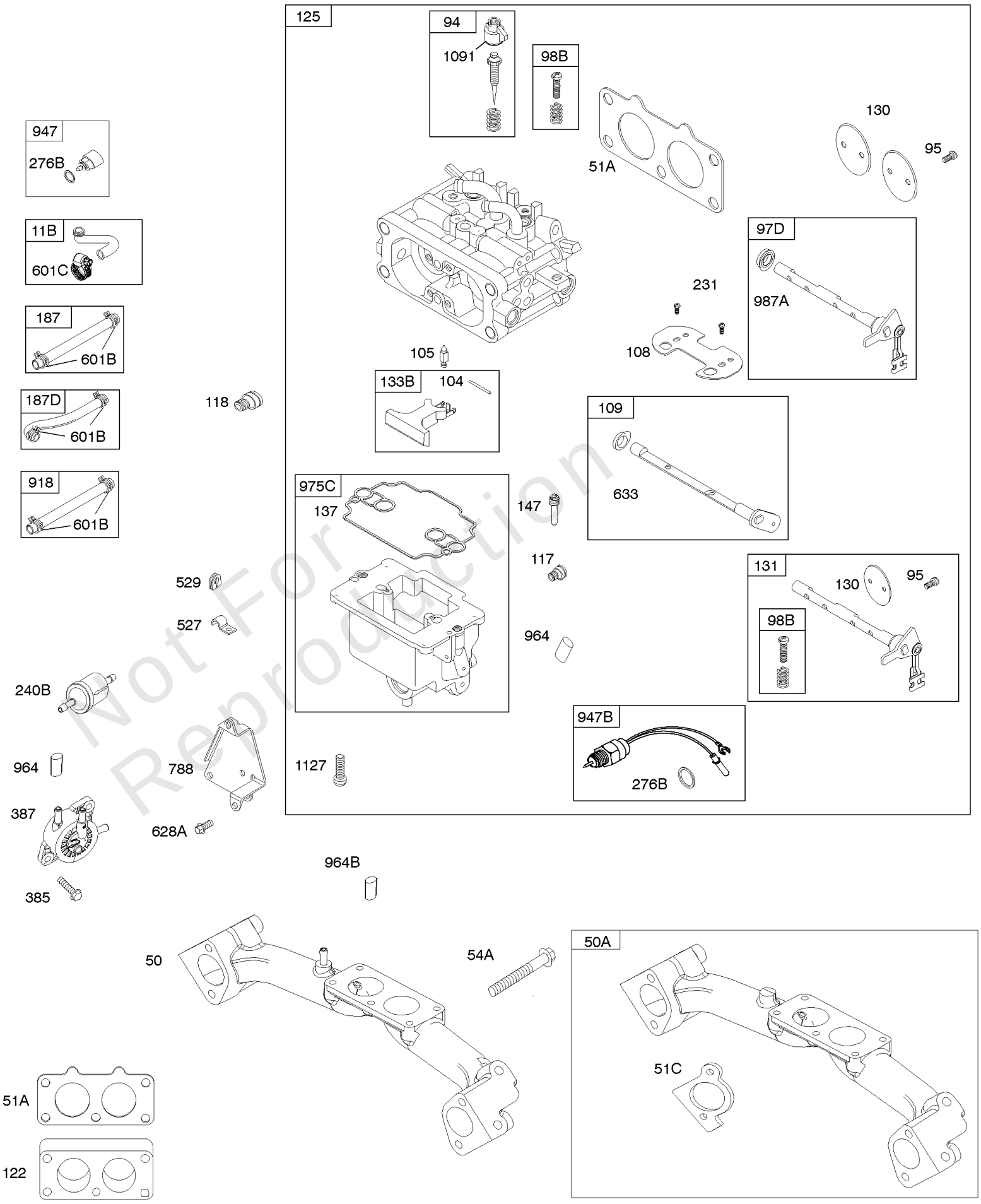

Not For Reproduction

Copyright © Briggs & Stratton. All Rights reserved

Carburetor, Fuel Supply, Intake Manifold,

REF NO	PART NO	QTY	DESCRIPTION
11B	806379		TUBE, Breather
50	844504		MANIFOLD, Intake
50A	806376		MANIFOLD, Intake
51A	690950		GASKET, Intake
51C	806418		GASKET, Intake -(Manifold/Heads)
54A	806444		SCREW -(Intake Manifold)
94	842883		KIT, Idle Mixture
95	690718		SCREW -(Throttle Valve)
97D	808715		SHAFT, Throttle
98B	809716		KIT, Idle Speed
104	690739		PIN, Float Hinge
105	809759		VALVE, Float Needle
108	809643		VALVE, Choke
109	808181		SHAFT, Choke
117	809708		JET, Main -(Standard) -Used Before Code Date 09122400
118	809723		JET, Main -(High Altitude) -Used Before Code Date 09122400
122	690870		SPACER, Carburetor
125	-----		Carburetor -(No Longer Available, For Replacement See Reference 125A) -Used Before Code Date 09122400
130	809642		VALVE, Throttle
131	809718		KIT, Throttle Shaft
133B	809637		FLOAT, Carburetor
137	809645		GASKET, Float Bowl
147	809709		NOZZLE, Carburetor
187	791766		LINE, Fuel -(15 Inches Long)(Cut To Required Length)
187D	791744		LINE, Fuel -(Formed)(14 Inches Long)(Cut To Required Length)
231	690718		SCREW -(Choke Valve)
240B	84001895		FILTER, Fuel -(Includes Paper Element With A 40 Micron Rating)
276B	806476		WASHER, Sealing -(Float Bowl)
385	807084		SCREW -(Fuel Pump)
387	808656		PUMP, Fuel
527	690423		CLAMP, Tube
529	690744		GROMMET
601B	791850		CLAMP, Hose
601C	691145		CLAMP, Hose -(Silver)
628A	806660		SCREW -(Fuel Pump Bracket) (M8x18mm)
633	690722		SEAL, Choke/Throttle Shaft
788	691559		BRACKET, Fuel Pump
918	791880		HOSE, Vacuum -(Cut To Required Length)

Not For Reproduction

Copyright © Briggs & Stratton. All Rights reserved

Carburetor, Fuel Supply, Intake Manifold,

Mfg. No: 386777-0007-G1

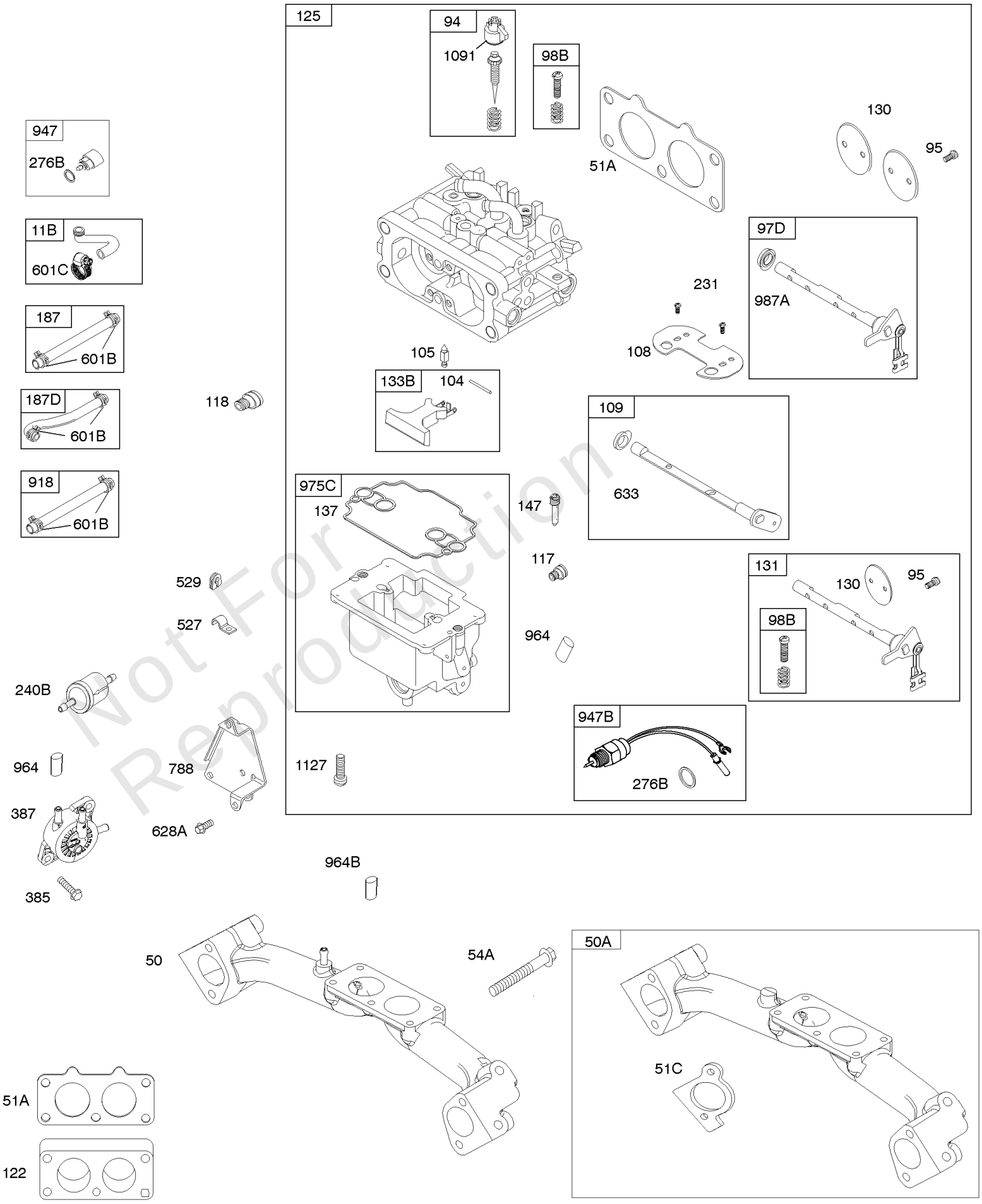

Not For Reproduction

Copyright © Briggs & Stratton. All Rights reserved

Carburetor, Fuel Supply, Intake Manifold,

REF NO	PART NO	QTY	DESCRIPTION
947	842109		SOLENOID, Fuel
947B	809632		SOLENOID-FUEL
964	590799		CAP, Connector
964B	809640		CAP, Connector
975C	809717		BOWL, Float
987A	691000		SEAL, Throttle Shaft
1091	691515		CAP, Limiter
1127	809715		SCREW -(Float Bowl to Carburetor Body)

Not For Reproduction

Copyright © Briggs & Stratton. All Rights reserved

Crankshaft, Cylinder, Sump, Piston, Rings, Connecting Rod, Cam Shaft

Mfg. No: 386777-0007-G1

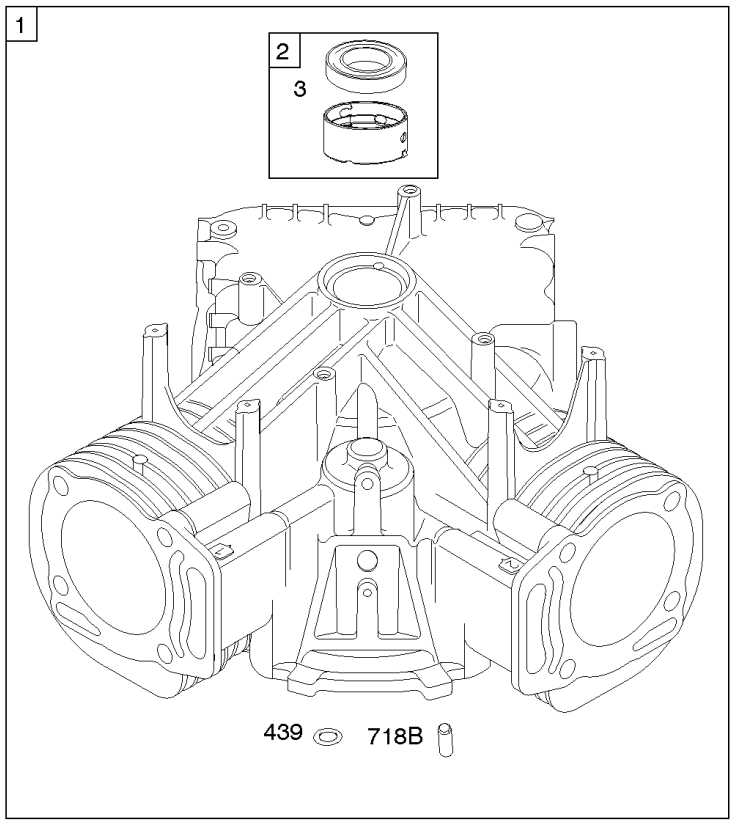

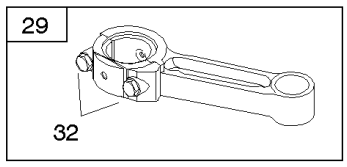

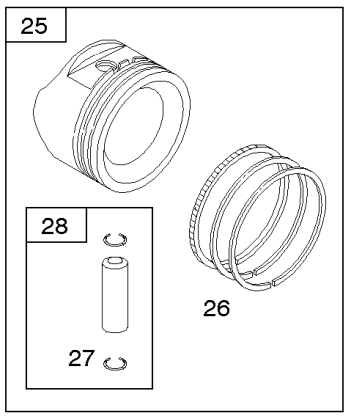

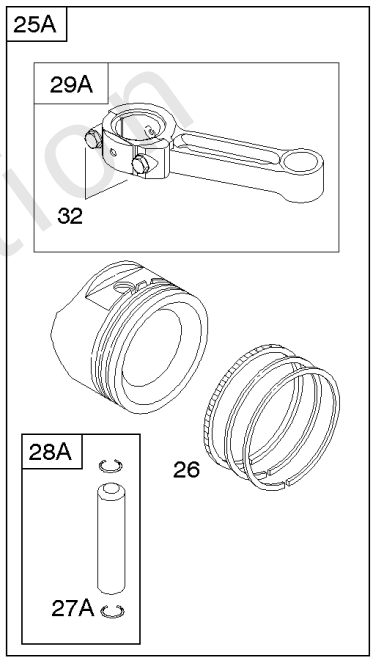

1036 EMISSIONS LABEL

1330 REPAIR MANUAL

1319 WARNING LABEL

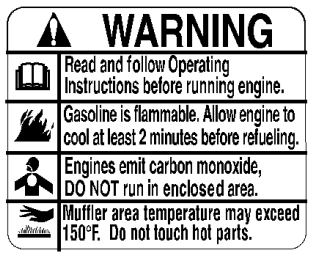

REQUIRED *when replacing parts with warning labels affixed.*

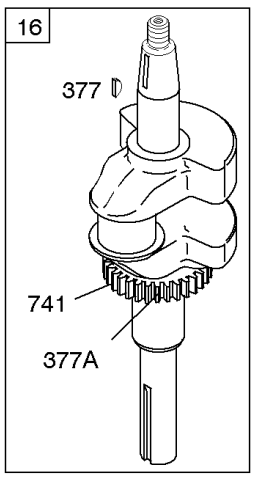

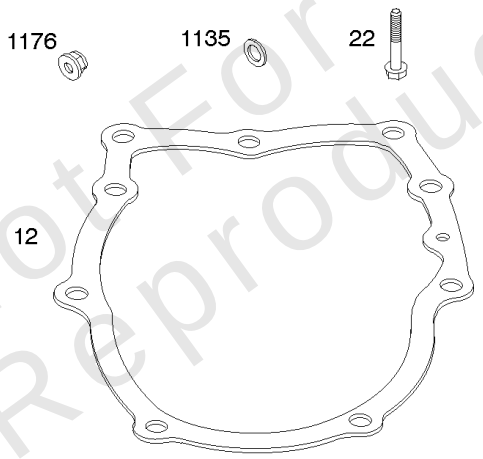

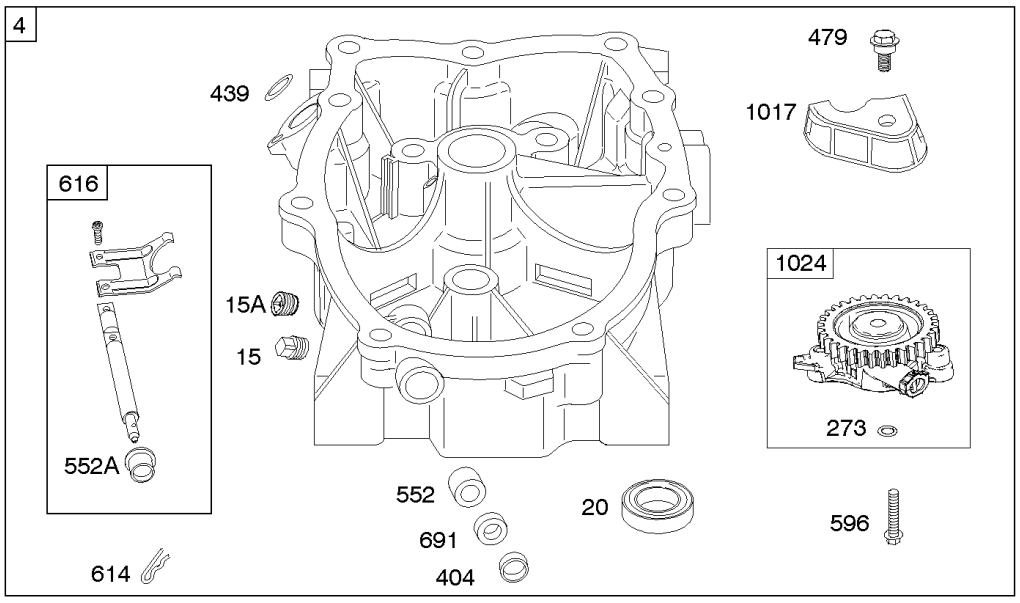

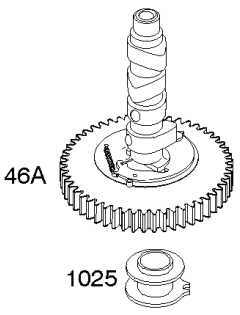

Not For Reproduction

Copyright © Briggs & Stratton. All Rights reserved

Crankshaft, Cylinder, Sump, Piston, Rings, Connecting Rod, Cam Shaft

REF NO	PART NO	QTY	DESCRIPTION
1	808647		CYLINDER ASSEMBLY -Used Before Code Date 05080100
1	842648		CYLINDER ASSEMBLY -Used After Code Date 05073000
2	808534		KIT, Bushing/Seal -(Magneto Side)
3	805101S		SEAL, Oil -(Magneto Side)
4	843954		SUMP, Engine
12	846487		GASKET, Crankcase
15	690946		PLUG, Oil Drain -(3/8"-18 NPTF-External 7/16" Sq)
15A	691680		PLUG, Oil Drain -(3/8"-18 NPTF - Internal 3/8" Sq)
16	843809		CRANKSHAFT
20	805049S		SEAL, Oil -(PTO Side)
22	807362		SCREW -(Crankcase Cover/Sump)
25	844009		PISTON ASSEMBLY -(Standard) -Used Before Code Date 07063000
25	844877		PISTON ASSEMBLY -(.020 Oversize) -Used After Code Date 07062900
25	843805		PISTON ASSEMBLY -(Standard) -Used After Code Date 07062900
25A	843823		PISTON ASSEMBLY -(.020 Oversize) (Includes Connecting Rod, Piston, Rings, Piston Pin andPiston Pin Locks) -Used Before Code Date 07063000
26	843806		SET, Ring -(Standard)
26	843824		SET, Ring -(.020 Oversize)
27	690683		LOCK, Piston Pin -Used After Code Date 07062900
27A	806378		LOCK, Piston Pin -Used Before Code Date 07063000
28	844023		PIN, Piston -Used After Code Date 07062900
28A	808526		PIN, Piston -Used Before Code Date 07063000
29	807900S		ROD, Connecting -(Standard) -Used After Code Date 07062900
29A	-----		Rod-Connecting -(See Reference 25 for replacement) -Used Before Code Date 07063000
32	690698		SCREW -(Connecting Rod)
46A	690927		CAMSHAFT
273	690681		SEAL, O-Ring -(Oil Pump)
357	691483		KEY, Drive Pulley
377	808095		KEY, Flywheel
377A	691639		KEY, Woodruff
404	690704		WASHER -(Governor Crank) (Crankcase Cover/Sump)

Not For Reproduction

Copyright © Briggs & Stratton. All Rights reserved

Crankshaft, Cylinder, Sump, Piston, Rings, Connecting Rod, Cam Shaft

Mfg. No: 386777-0007-G1

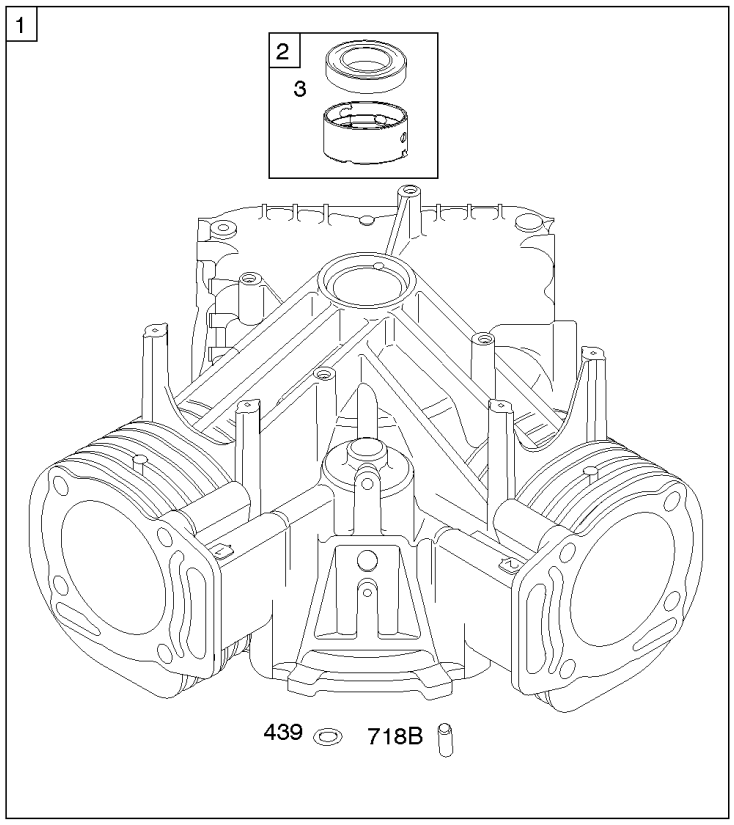

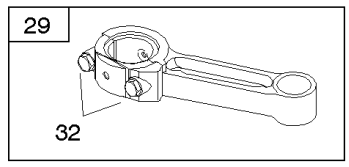

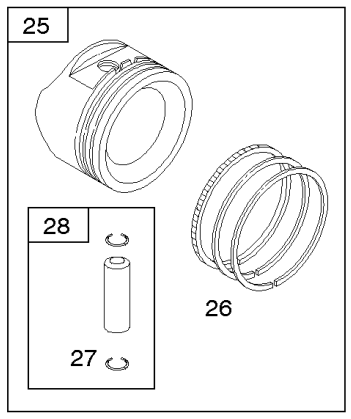

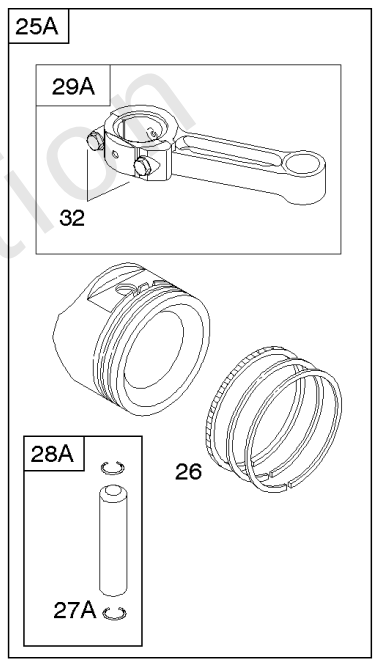

1036 EMISSIONS LABEL

1330 REPAIR MANUAL

1319 WARNING LABEL

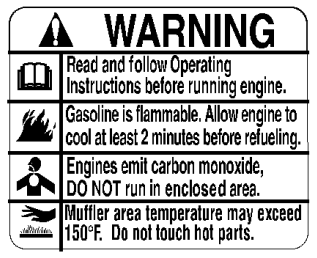

REQUIRED *when replacing parts with warning labels affixed.*

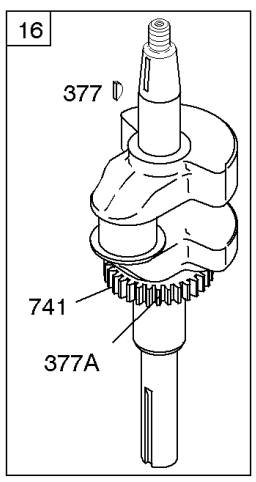

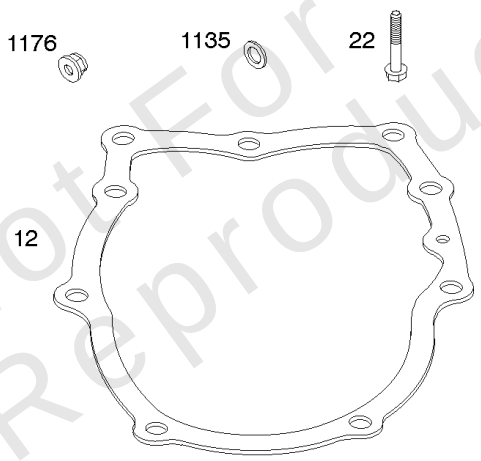

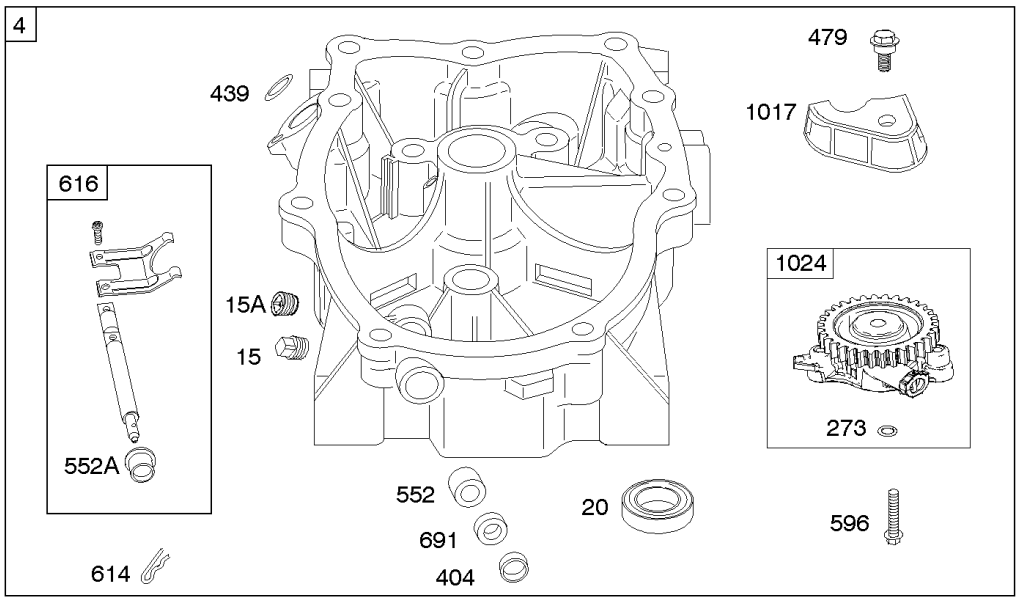

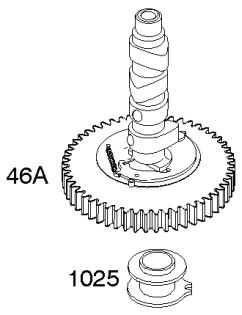

Not For Reproduction

Copyright © Briggs & Stratton. All Rights reserved

Crankshaft, Cylinder, Sump, Piston, Rings, Connecting Rod, Cam Shaft

REF NO	PART NO	QTY	DESCRIPTION
439	692154		O-RING, Oil Gallery -(Crankcase Cover/Sump or Cylinder Assembly)
479	843961		SCREW -(Oil Pump Screen)
552	690701		BUSHING, Governor Crank
552A	806686		BUSHING, Governor Crank
596	807389		SCREW -(Oil Pump)
614	691550		PIN, Cotter
616	806685		CRANK, Governor
691	842826		SEAL, Governor Shaft
718B	806469		PIN, Locating
741	846085		GEAR, Timing
1017	843960		SCREEN, Oil Pump
1024	-----		Pump-Oil -Used Before Code Date 09022700
1024	843959		PUMP, Oil -Used After Code Date 09022600
1025	690689		SPOOL, Governor
1036	-----		Label-Emissions
1135	806497		WASHER -(Crankcase Cover/Sump)
1176	842067		NUT -(Exhaust Manifold)
1319	21786GS		LABEL, Warning
1330	272144		MANUAL, Repair

Not For Reproduction

Copyright © Briggs & Stratton. All Rights reserved

Cylinder Head, Valves

Mfg. No: 386777-0007-G1

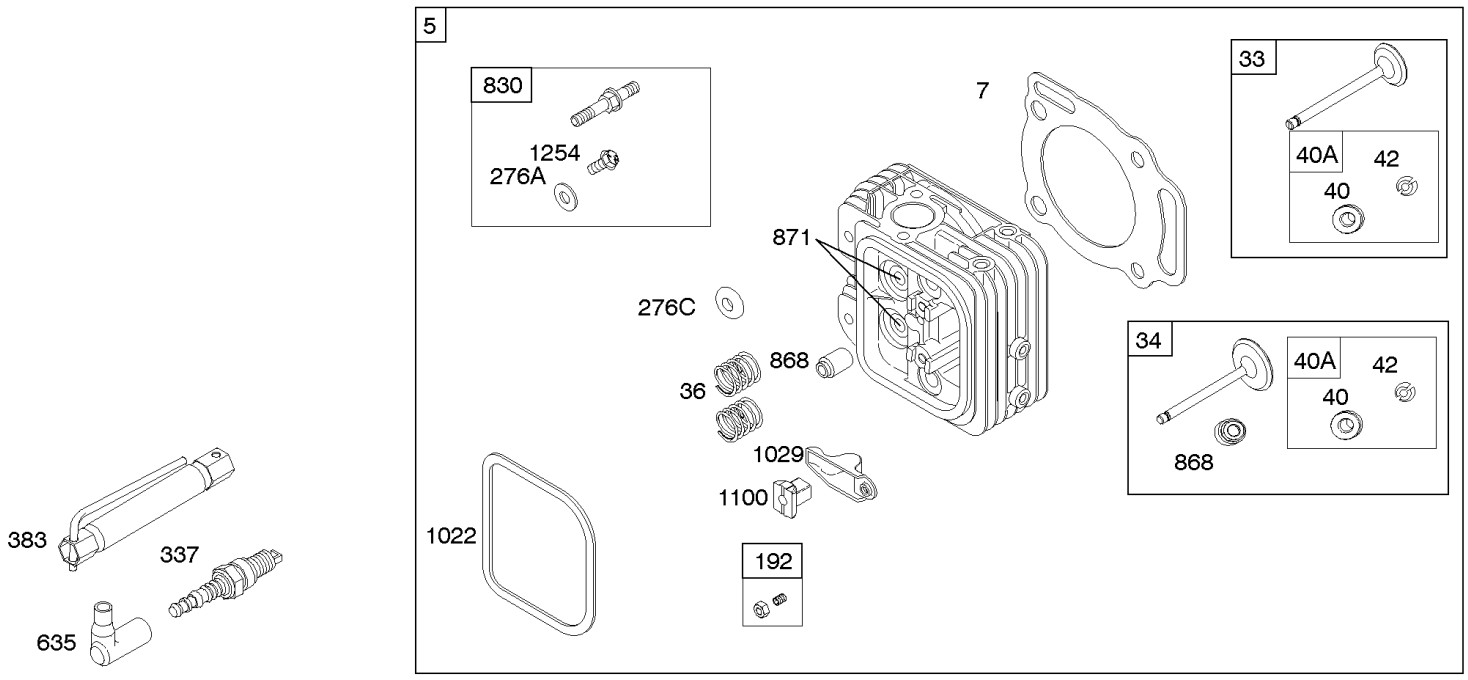

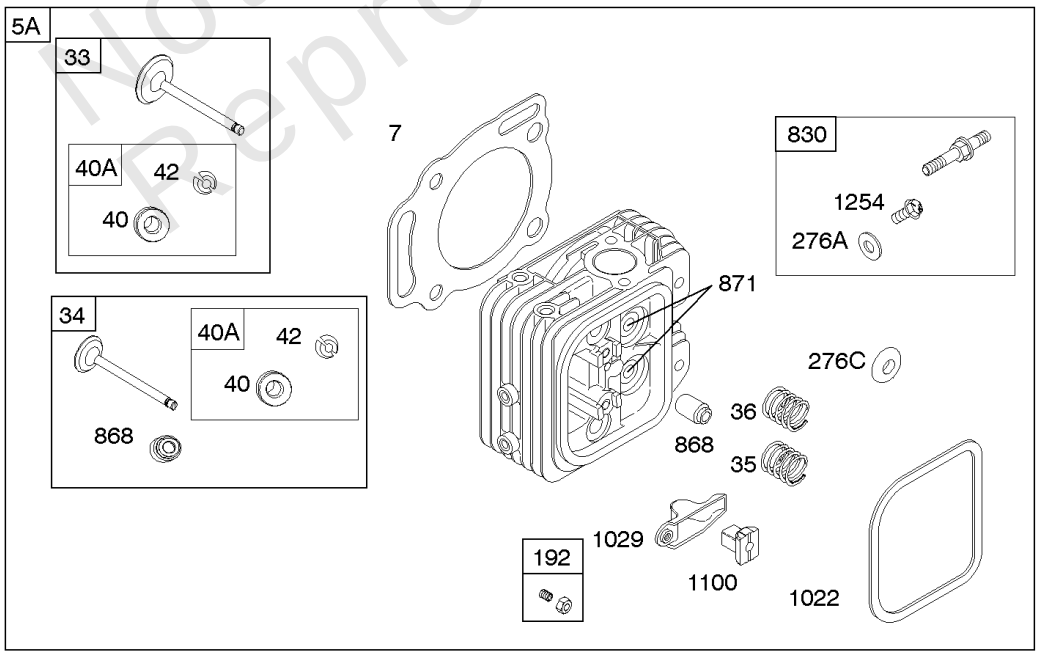

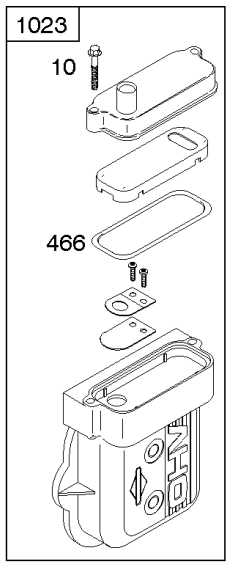

Not for Reproduction

Cylinder Head, Valves

REF NO	PART NO	QTY	DESCRIPTION
5	845713		HEAD, Cylinder -(Cylinder 1)
5A	845714		HEAD, Cylinder -(Cylinder 2)
7	842622		GASKET, Cylinder Head -(Graphoil)
10	806421		SCREW -(Breather Assembly)
13	842618		SCREW -(Cylinder Head) -Used After Code Date 05073100
13A	-----		Screw -(Cylinder Head) (NO LONGER AVAILABLE) -Used Before Code Date 05080100
33	806419		VALVE, Exhaust
34	845712		VALVE, Intake -Used After Code Date 12013100
34	843751		VALVE, Intake -Used Before Code Date 12020100
35	692084		SPRING, Valve -(Intake)
36	692084		SPRING, Valve -(Exhaust)
40	692058		RETAINER, Valve
40A	844895		RETAINER, Valve
42	807683		KEEPER, Valve
45	843379		TAPPET, Valve
192	807623		ADJUSTER. Rocker Arm
276A	807085		WASHER, Sealing -(Carburetor Plug)
276C	691766		WASHER, Sealing -(Cylinder Head)
337	792015		PLUG, Spark
383	19576S		WRENCH, Spark Plug
466	806466		SEAL, O-Ring -(Breather Assembly)
635	692076		BOOT, Spark Plug
830	809157		STUD, Rocker Arm -(Rocker Arm)
868	691963		SEAL, Valve
871	692057		BUSHING, Valve Guide
1022	806039S		GASKET, Rocker Cover
1023	843750		COVER, Rocker -(Includes Breather Assembly)
1023A	691558		COVER, Rocker -(Cylinder 1) (Fuel Pump)
1026	691836		ROD, Push -(Intake)(Steel)
1026	691758		ROD, Push -(Exhaust)(Aluminum)
1029	807323		ARM, Rocker
1100	791959		PIVOT, Rocker Arm
1254	807084		SCREW -(Rocker Arm Stud)

Not For reproduction

Copyright © Briggs & Stratton. All Rights reserved

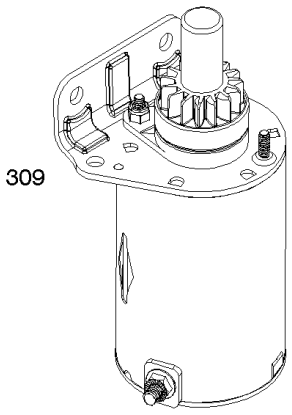

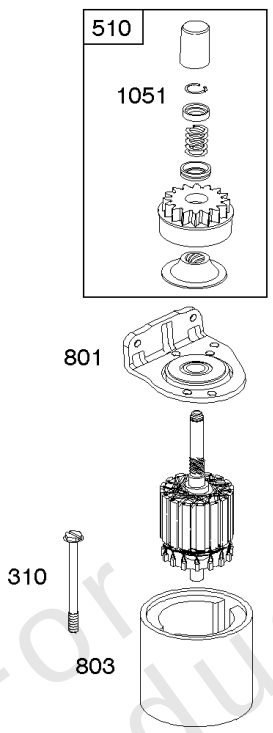

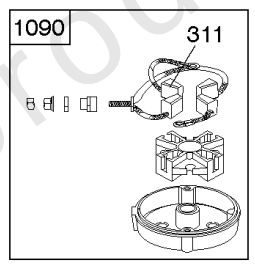

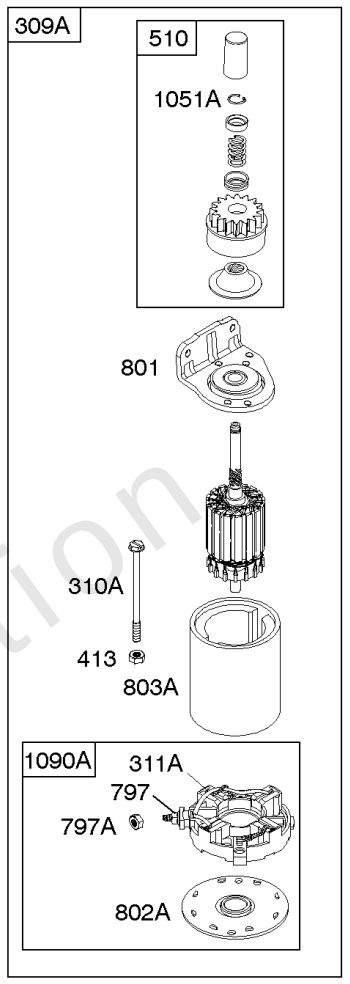

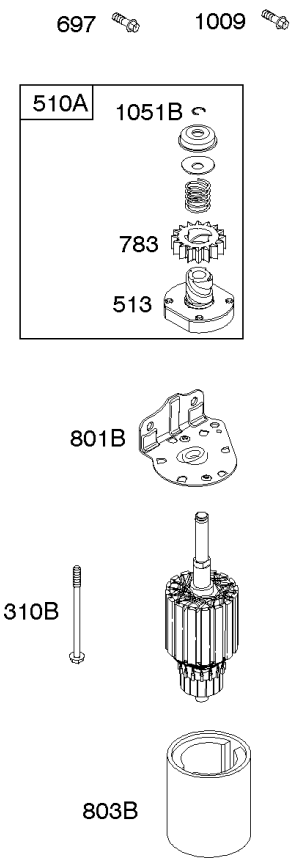

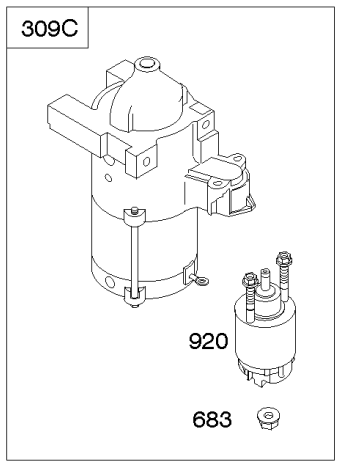

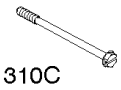

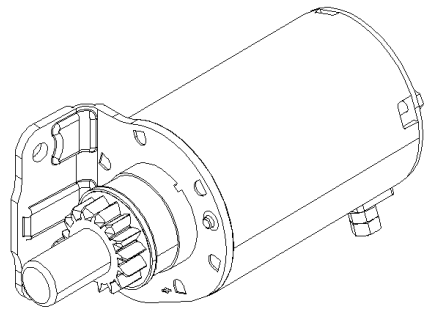

Not For Reproduction

Copyright © Briggs & Stratton. All Rights reserved

Electric Starter

REF NO	PART NO	QTY	DESCRIPTION
309	846451		MOTOR, Starter -(Steel Ring Gear)
309A	-----		Motor-Starter -(For Replacement Starter Motor, Order Reference 309)
309E	844717		MOTOR, Starter -Used After Code Date 11011400
310	-----		Screw -(Starter Motor) (For Replacement Starter Housing, Order Reference 309)
310A	690323		SCREW -(Starter Motor)
310B	-----		Screw -(Starter Motor) (NO LONGER AVAILABLE)
310C	806474		SCREW -(Starter Motor)
311	-----		Brush Set
311A	497608		SET, Brush
413	693587		NUT -(Starter Motor)
510	496881		DRIVE, Starter -(Steel Pinion Gear) -Used Before Code Date 14052800
510A	696541		DRIVE, Starter
513	692024		CLUTCH, Drive
683	691029		NUT -(Starter Solenoid) (1/4-20)
683	845758		NUT -(Starter Solenoid) (M6)
697	692062		SCREW -(Starter Motor) (Drive Cap)
783	695708		GEAR-PINION
797	693167		NUT -(Brush Retainer)
797A	691029		NUT -(Brush Retainer)
801	-----		Cap-Drive
801B	691283		CAP, Drive
802A	691286		CAP, End
803	-----		Housing-Starter -(For Replacement Starter Motor, Order Reference 309)
803A	-----		Housing-Starter -(For Replacement Starter Motor, Order Reference 309)
803B	-----		Housing-Starter -(For Replacement Starter Motor, Order Reference 309)
1009	691902		SCREW -(USE REFERENCE 697 ONLY) (M8x20mm)
1051	690736		RING, Retaining -Used Before Code Date 14052800
1051A	691124		RING, Retaining
1051B	691265		RING, Retaining
1090	496813		RETAINER, Brush -Used Before Code Date 14052800
1090A	691293		RETAINER, Brush

Not For Reproduction

Copyright © Briggs & Stratton. All Rights reserved

Exhaust System, Oil Lubrication, Filter, and Cooler

Mfg. No: 386777-0007-G1

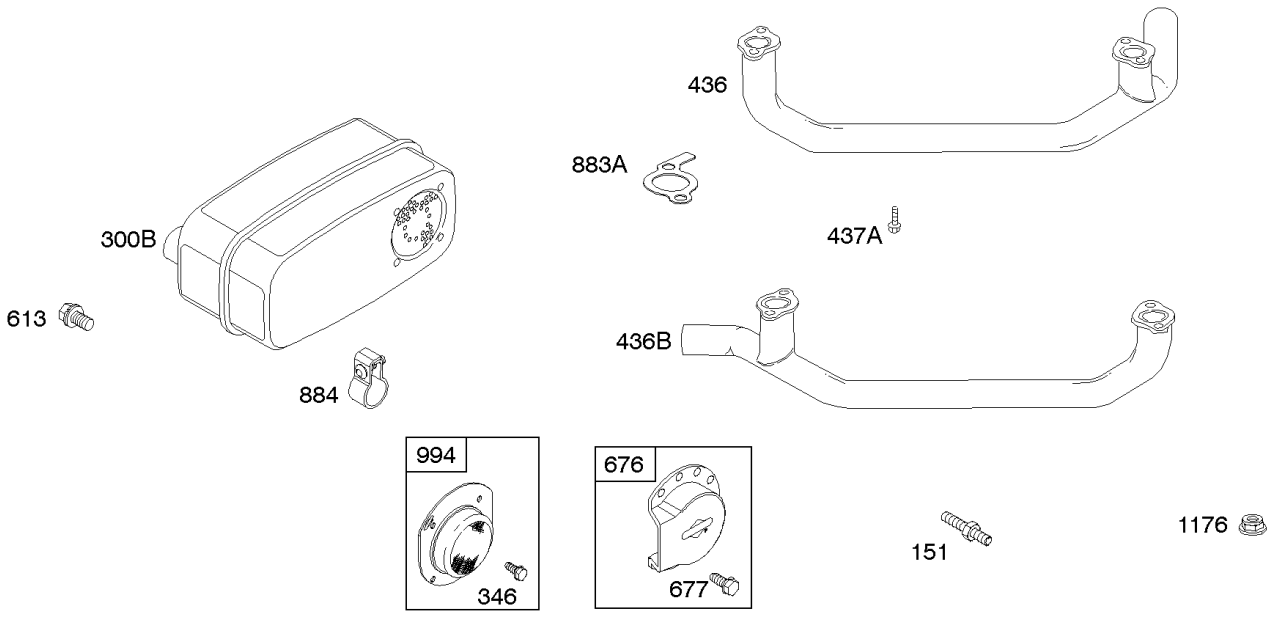

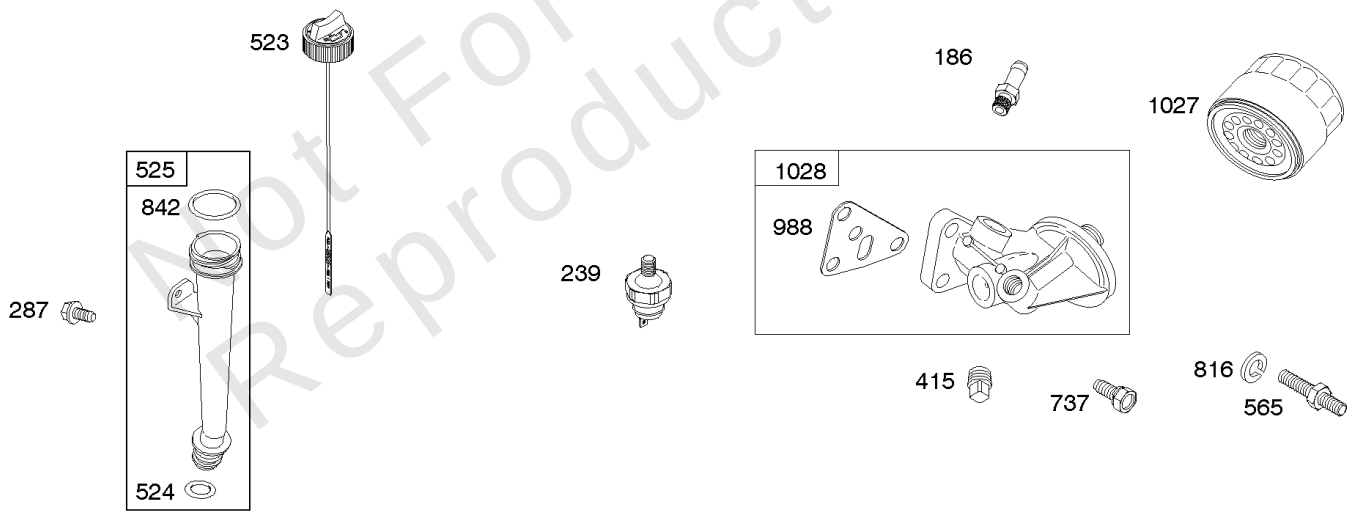

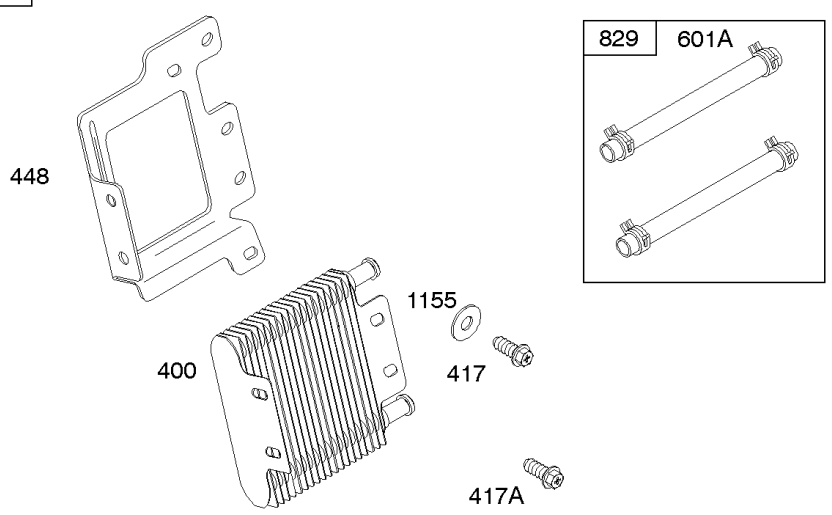

Not For Reproduction

Exhaust System, Oil Lubrication, Filter, and Cooler

REF NO	PART NO	QTY	DESCRIPTION
151	841185		STUD -(Exhaust Manifold)
186	693184		CONNECTOR, Hose
239	690233		SWITCH, Oil Pressure
287	807084		SCREW -(Dipstick Tube) (M6x14mm)
346	794845		SCREW -(Spark Arrestor)
400	846489		COOLER, Oil
415	794903		PLUG -(Square Head)
417	843345		SCREW -(Oil Cooler) (M6x8mm)
417A	841233		SCREW -(Oil Cooler) (M6x10mm)
437A	691902		SCREW -(Exhaust Manifold)
448	841488		BRACKET, Oil Cooler
523	692101		DIPSTICK
524	692053		SEAL, O-Ring -(Dipstick Tube)
525	692093		TUBE, Dipstick
565	690682		STUD -(Oil Filter Adapter)
601A	841597		CLAMP, Hose
613	691902		SCREW -(Muffler)
676	795036		DEFLECTOR, Muffler
677	690661		SCREW -(Muffler Deflector) (#8-18 x 0.375 lg)
677	794845		SCREW -(Muffler Deflector) (M4x14mm)
737	690679		SCREW -(Oil Filter Adapter) (M6x21mm)
816	690706		WASHER -(Oil Filter Adapter)
829	841999		HOSE/CLAMP ASSEMBLY
842	691870		SEAL, O-Ring -(Dipstick Tube)
883A	806425		GASKET, Exhaust
884	691956		CLAMP, Muffler
988	692063		GASKET, Oil Adapter
994	794945		ARRESTOR, Spark
1027	842921		FILTER, Oil -(Premium Black)
1028	843898		ADAPTER, Oil Filter
1155	806647		WASHER -(Oil Cooler)
1176	842067		NUT -(Exhaust Manifold)

Not For Reproduction

Copyright © Briggs & Stratton. All Rights reserved

Kit-Carburetor Overhaul, Gasket Engine & Valve Set

Mfg. No: 386777-0007-G1

121 CARBURETOR OVERHAUL KIT

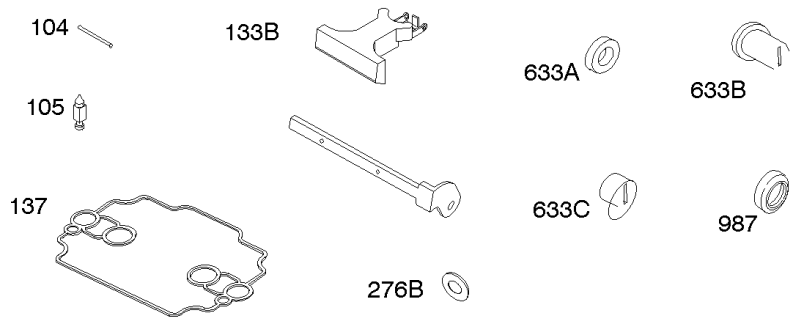

121C CARBURETOR OVERHAUL KIT

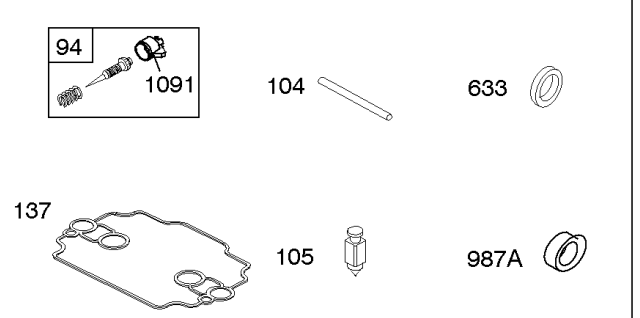

358 ENGINE GASKET SET

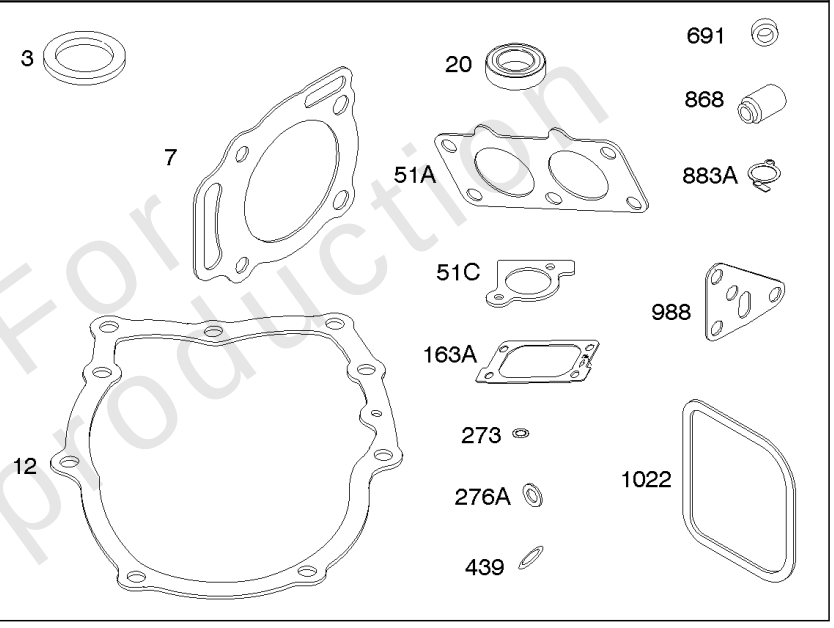

1095 VALVE GASKET SET

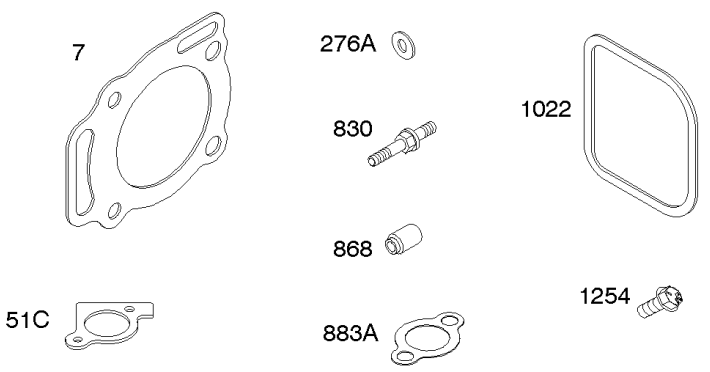

Not For Reproduction

Copyright © Briggs & Stratton. All Rights reserved

Kit-Carburetor Overhaul, Gasket Engine & Valve Set

REF NO	PART NO	QTY	DESCRIPTION
3	805101S		SEAL, Oil -(Magneto Side)
7	842622		GASKET, Cylinder Head -(Graphoil)
12	846487		GASKET, Crankcase
20	805049S		SEAL, Oil -(PTO Side)
51A	690950		GASKET, Intake
51C	806418		GASKET, Intake -(Manifold/Heads)
94	842883		KIT, Idle Mixture
104	690739		PIN, Float Hinge
105	809759		VALVE, Float Needle
121	843787		KIT, Carburetor Overhaul -Used After Code Date 09122300
121C	842261		KIT, Carburetor Overhaul
133B	809637		FLOAT, Carburetor
137	809645		GASKET, Float Bowl
163A	692087		GASKET, Air Cleaner -(Used With Metal Air Cleaner Base)
273	690681		SEAL, O-Ring -(Oil Pump)
276A	807085		WASHER, Sealing -(Carburetor Plug)
276B	806476		WASHER, Sealing -(Float Bowl)
358	842658		GASKET SET, Engine
439	692154		O-RING, Oil Gallery -(Crankcase Cover/Sump or Cylinder Assembly)
633	690722		SEAL, Choke/Throttle Shaft
633A	809641		SEAL, Choke/Throttle Shaft
633C	809644		SEAL, Choke/Throttle Shaft
633B	809638		SEAL, Choke/Throttle Shaft
691	842826		SEAL, Governor Shaft
830	809157		STUD, Rocker Arm -(Rocker Arm)
868	691963		SEAL, Valve
883A	806425		GASKET, Exhaust
987	809639		SEAL, Choke/Throttle Shaft
987A	691000		SEAL, Throttle Shaft
988	692063		GASKET, Oil Adapter
1022	806039S		GASKET, Rocker Cover
1091	691515		CAP, Limiter
1095	842662		GASKET SET, Valve
1254	807084		SCREW -(Rocker Arm Stud)

Not For Reproduction

Copyright © Briggs & Stratton. All Rights reserved

Replacement Engine - US & Canada

REF NO	PART NO	QTY	DESCRIPTION
	3867773036	1	Replacement Engine
	695393	1	Replacement Short Block
	-----		Top No-Load Speed: 3500 -Trim: G1
	-----		Service Note: Transfer the Main Governor Spring to the replacement engine.

Not For Reproduction

Copyright © Briggs & Stratton. All Rights reserved

Shrouds, Carburetor Cover

Mfg. No: 386777-0007-G1

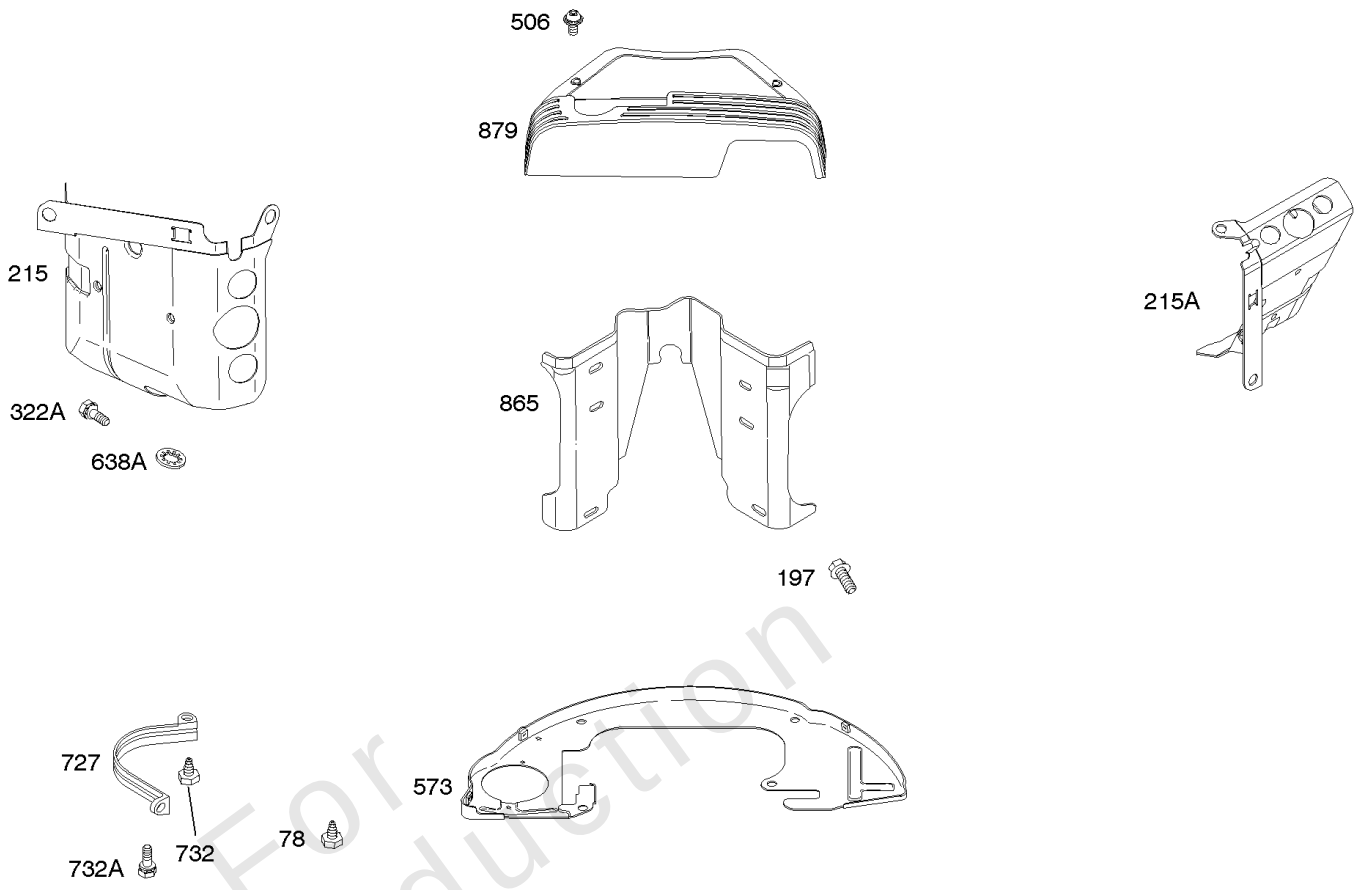

Not For Reproduction

Copyright © Briggs & Stratton. All Rights reserved

Shrouds, Carburetor Cover

REF NO	PART NO	QTY	DESCRIPTION
78	690688		SCREW -(Flywheel Guard)
197	807163		SCREW -(Back Plate)
215	841183		GUIDE, Air -(Cylinder 2)
215A	841182		GUIDE, Air -(Cylinder 1)
322A	841233		SCREW -(Cylinder Head Cover)
506	807120		SCREW -(Carburetor/EFI Cover)
573	841310		PLATE, Back
638A	691551		WASHER -(Cylinder Head Cover)
727	841313		COVER, Starter Drive -(Black)
732	690688		SCREW -(Starter Drive Cover)
732A	841233		SCREW -(Starter Drive Cover)
865	843768		COVER, Air Guide -(Black)
879	807460		COVER, Carburetor/EFI

Not For Reproduction

Copyright © Briggs & Stratton. All Rights reserved

Model 29, 30, 35 & 38 Engine Accessories Catalog

Not For Reproduction

Copyright © Briggs & Stratton. All Rights reserved

25-Apr-2024

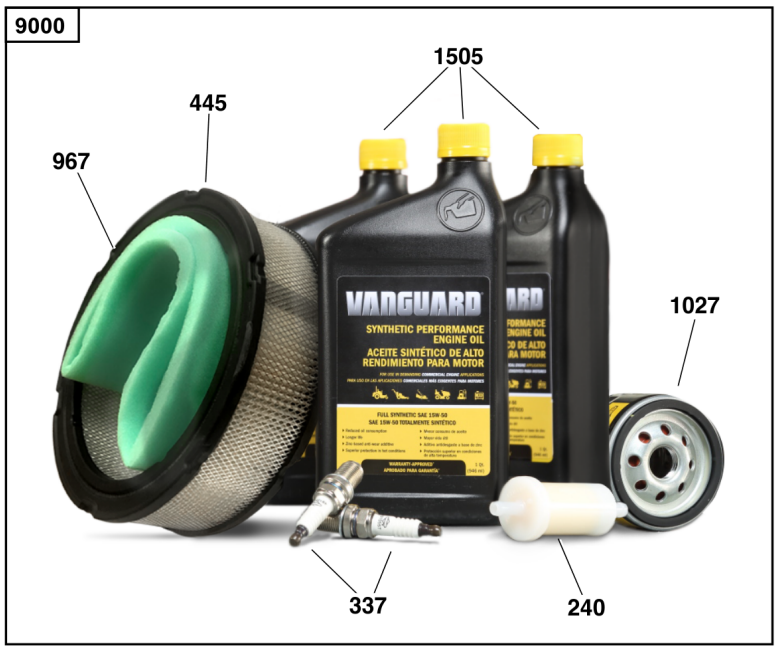

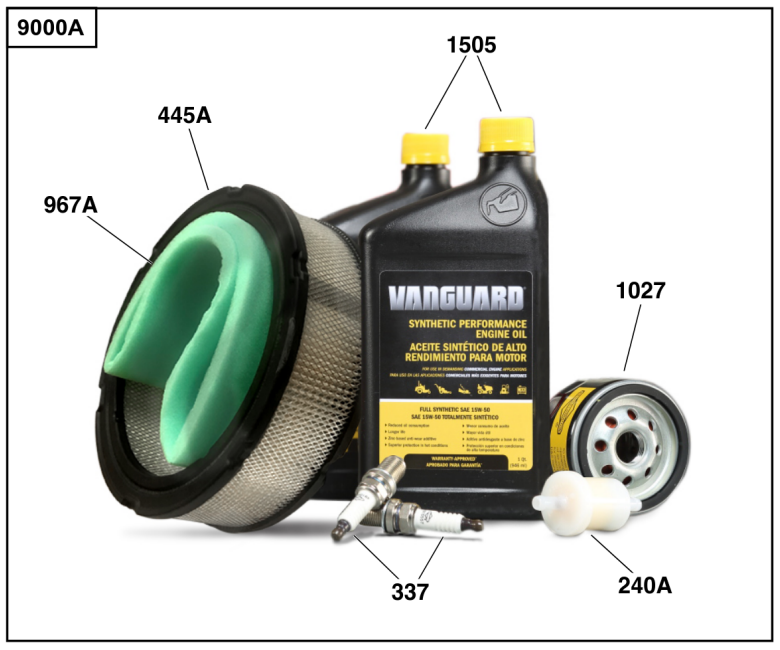

Not For Reproduction

Copyright © Briggs & Stratton. All Rights reserved

Maintenance Kits

REF NO	PART NO	QTY	DESCRIPTION
9000	84004936		KIT, Maintenance -(Non-Oil Guard™ Engines) (20 - 23 HP)
9000A	84004937		KIT, Maintenance -(Non-Oil Guard™ Engines) (12.5 - 18 HP)
9000B	84002315		KIT, Maintenance -(Non-Oil Guard™ Engines)
240	845125	1	FILTER, Fuel
240A	84001895	1	FILTER, Fuel
337	491055S	2	PLUG, Spark
337	84007216	2	PLUG, SPARK -(China Only)
445	692519	1	FILTER, A/C Cartridge -"Professional / PXi" & "Commercial / CXi".
445A	394018S	1	FILTER, A/C Cartridge -"Professional / PXi" & "Commercial / CXi".
445B	841497	1	FILTER, A/C Cartridge -"Professional / PXi" & "Commercial / CXi".
967	692520	1	FILTER, Pre Cleaner
967A	272490S	1	FILTER, Pre Cleaner
1027	842921	1	FILTER, Oil -(Vanguard®)
1505	100169		OIL-1QT VANGUARD (CASE) -(1 qt. Bottle)

Not For Reproduction

Copyright © Briggs & Stratton. All Rights reserved

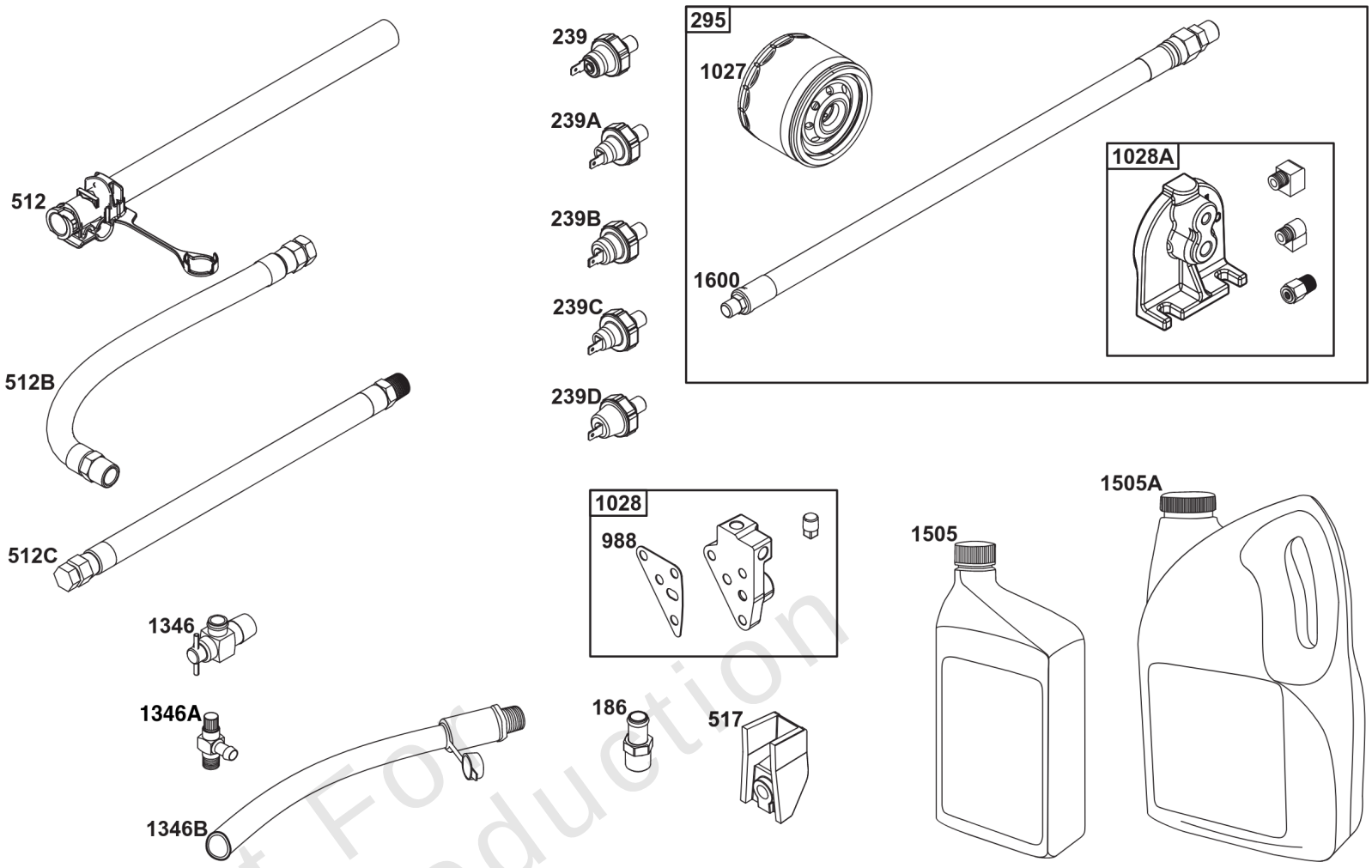

Not For Reproduction

Lubrication

REF NO	PART NO	QTY	DESCRIPTION
186	796532	1	CONNECTOR, Hose -(Threaded Engine Block Connector for EZ-Oil Drain Hose)(Order hose separate)
239	690233	1	SWITCH, Oil Pressure -(2-4 PSI Normally-Closed Switch)
239A	491657S	1	SWITCH, Oil Pressure -(3-5 PSI Normally-Closed Switch)
239B	841281	1	SWITCH, Oil Pressure -(7-10 PSI Normally-Closed Switch)
239C	694115	1	SWITCH, Oil Pressure -(9-13 PSI Normally-Closed Switch)
239D	697049	1	SWITCH, Oil Pressure -(3-6 PSI Normally-Open Switch)
295	492061	1	ADAPTER, Remote Oil Filter -(Remote oil filter head with 18" (48 cm) hoses)
295	492062	1	ADAPTER, Remote Oil Filter -(Remote oil filter head with 30" (76 cm) hoses)
512	594200	1	HOSE, Oil Drain -(EZ-Oil Drain Hose, 10.5")(Order threaded engine block connector separate)
512	593635	1	HOSE, Oil Drain -(EZ-Oil Drain Hose, 13.75")(Order threaded engine block connector separate)
512B	1723165SM	1	HOSE, Oil Drain, 10-1/2" Long, 3/8-18 Fittings -(10.5")
512C	5048681SM	1	HOSE, OIL DRAIN -(12.5")
517	593633	1	RETAINER, Oil Drain
988	692063	1	GASKET, Oil Adapter
1027	492932S	1	FILTER, Oil
1028	492687	1	ADAPTER, Oil Filter -(Adapter Kit for mounting remote oil filter)
1028A	495244	1	ADAPTER-OIL FILTER -(Remote oil filter mounting head with fittings)
1346	844802	1	VALVE, Oil Drain Shut Off
1346A	492031	1	VALVE, Oil Drain Shut Off
1346B	5401WEB	1	VALVE, Oil Drain Shut Off -(1/4 Turn Oil Drain Valve with Hose)
1505	100169		OIL-1QT VANGUARD (CASE) -(1 qt. Bottle)
1505A	100170		OIL-5QT VANGUARD (CASE) -(5 qt. Bottle)
1600	494724	2	HOSE, Remote Oil Filter -(Hoses only (2) 18" (48 cm))
1600	494725	2	HOSE, Remote Oil Filter -(Hoses only (2) 30" (76 cm))

Not For Reproduction

Copyright © Briggs & Stratton. All Rights reserved

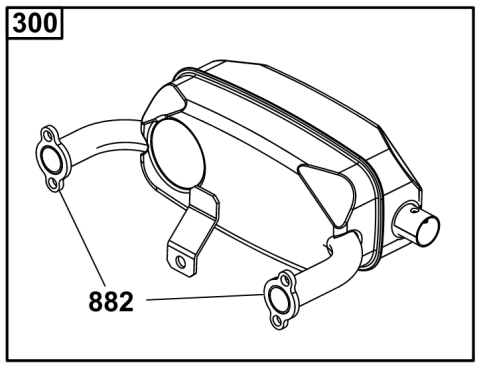

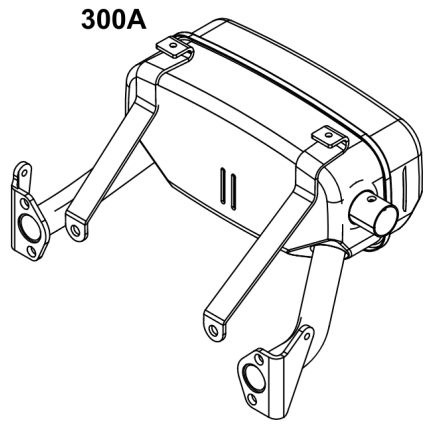

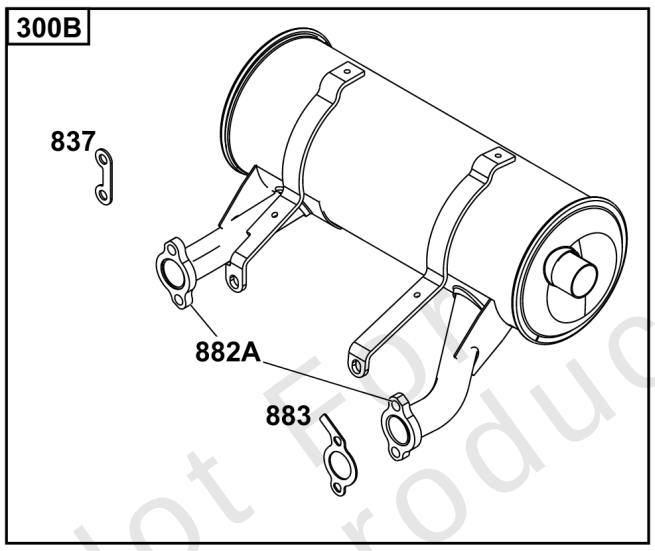

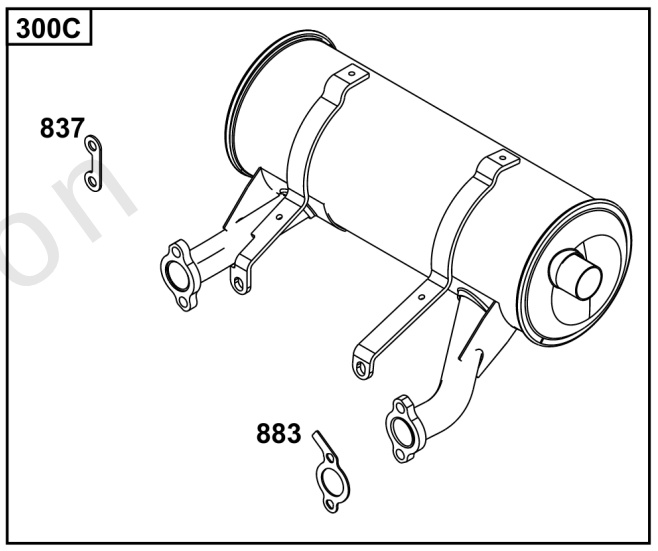

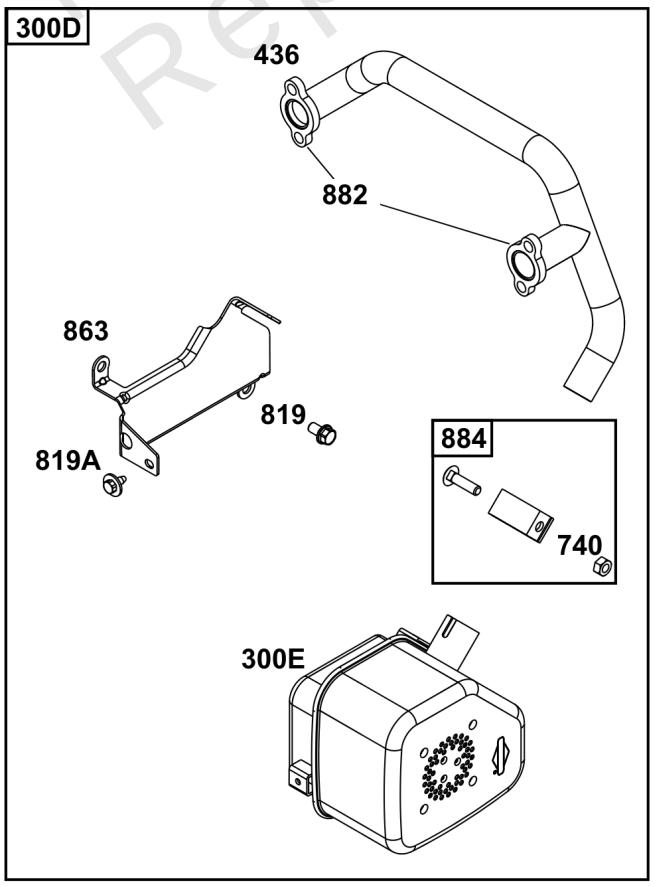

Not For Reproduction

Copyright © Briggs & Stratton. All Rights reserved

Starter Motor Side Outlet Mufflers

REF NO	PART NO	QTY	DESCRIPTION
300	690931	1	MUFFLER -(Super Lo-Tone) (Horizontal: 3054, 3564)
300A	690906	1	MUFFLER -(Super Lo-Tone) (Horizontal: 3054, 3564)
300B	808705	1	MUFFLER -(5" Round) (Horizontal: 3854, 3864)
300C	845873	1	MUFFLER -(5" Round, Stainless Steel) (Horizontal: 3854, 3864)
300D	995005	1	MUFFLER ASSY -(Lo-Tone) (Horizontal: 3054, 3564)
300E	692099	1	MUFFLER -(Lo Mount)
436	691499	1	MANIFOLD, Exhaust -(Cylinder 1) (Side Outlet)
740	793859	1	NUT
819	692056	2	SCREW -(Muffler Bracket) (M8x1.25)
819A	691514	2	SCREW -(Muffler Bracket) (M6 X 1.0)
837	808085	2	SPACER, Muffler -(Includes 2)
863	690756	1	BRACKET, Muffler -(Cylinder 1) (Side Outlet)
882	692074	2	FLANGE, Exhaust
882A	806965	2	FLANGE, Exhaust
883	806425	2	GASKET, Exhaust
884	690898	1	CLAMP, Muffler

Not For Reproduction

Copyright © Briggs & Stratton. All Rights reserved

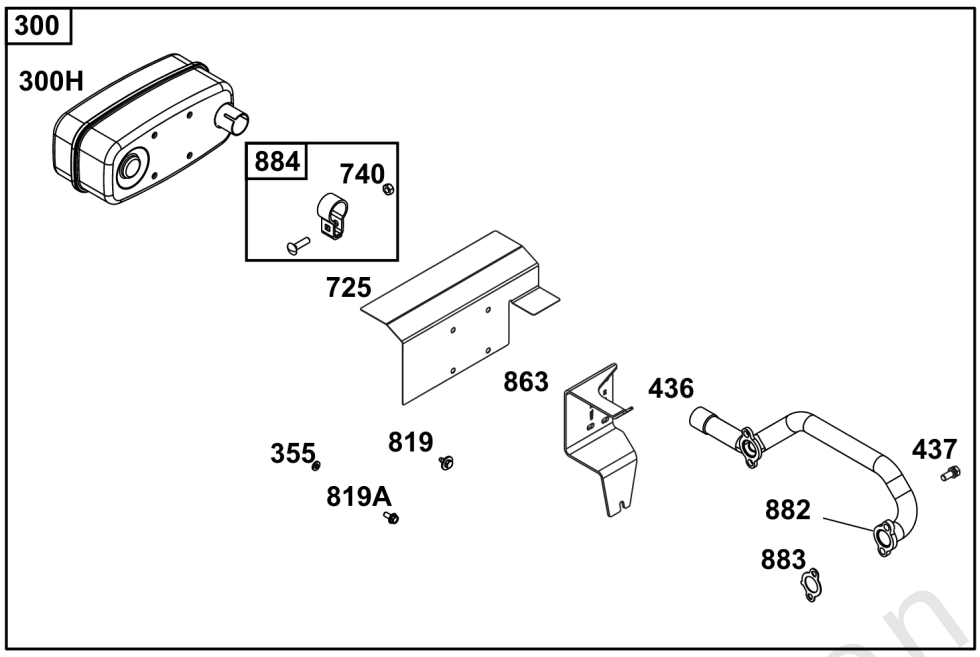

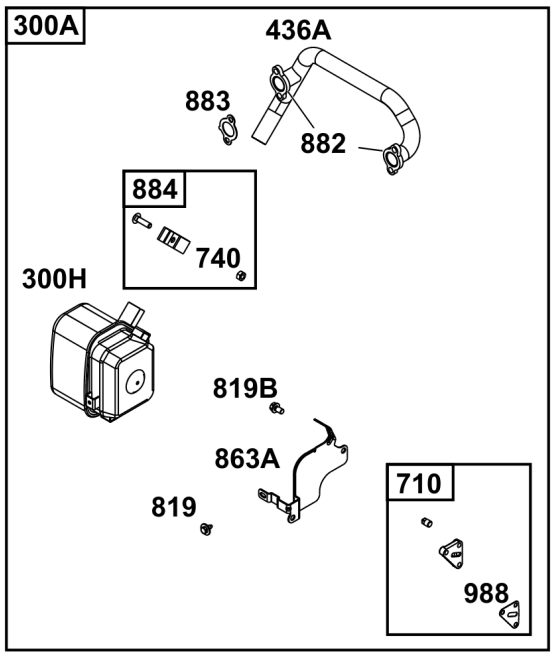

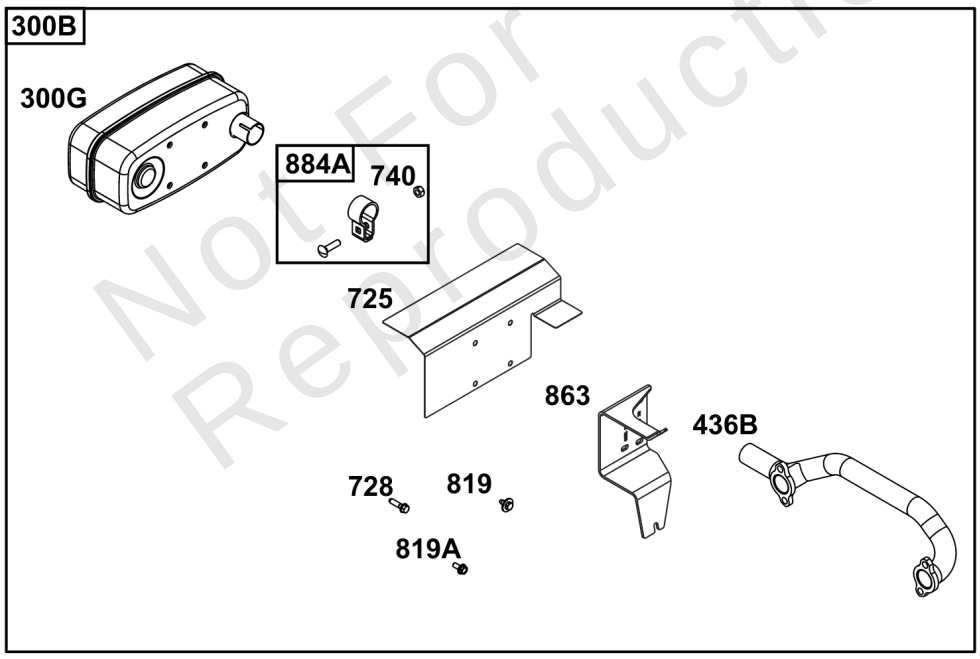

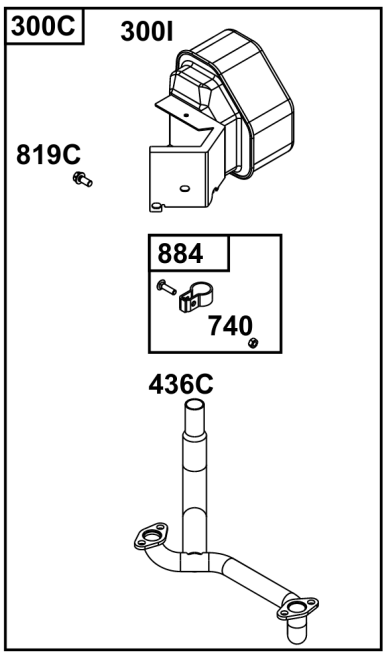

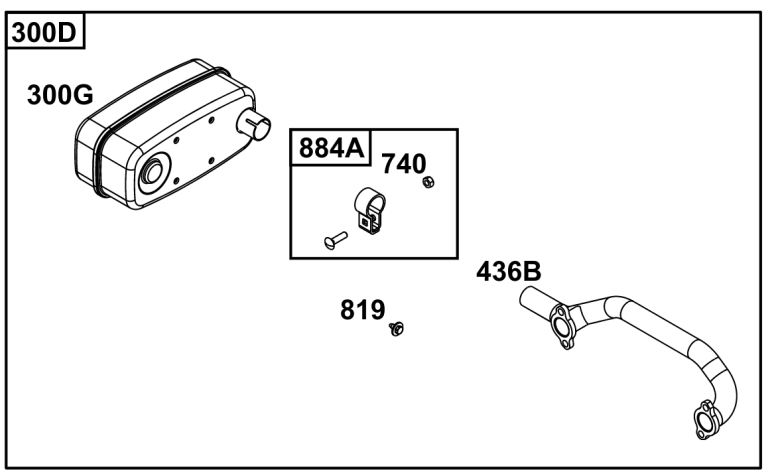

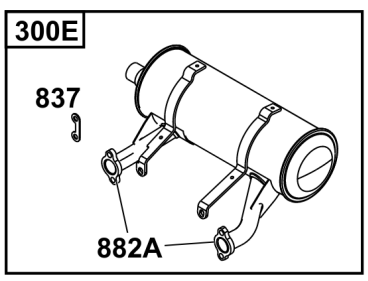

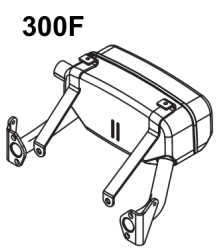

Not For Reproduction

Copyright © Briggs & Stratton. All Rights reserved

Oil Filter Side Outlet Mufflers

REF NO	PART NO	QTY	DESCRIPTION
300	995002	1	HIGH MNT SPR LO-TONE OIL FLTR SIDE -(Super Lo-Tone) (Horizontal: 3054, 3564) (Vertical: 3567)
300A	995000	1	OIL FILTER SIDE LO-MT -(Lo-Tone) (Horizontal: 3054, 3564) (Requires 808033 Oil Filter Adaptor)
300B	995004	1	HI MNT SPR LO-TONE OIL FLT SIDE -(Super Lo-Tone) (Horizontal: 3854, 3864) (Vertical: 3867)
300C	995009	1	COMMERCIAL MOWERS KIT -(For Wide Area Walker) (Vertical: 3567)
300D	995010	1	COMMERCIAL MOWERS KIT -(Vertical: 3867)
300E	808896	1	MUFFLER
300F	691562	1	MUFFLER -(Super Lo-Tone) (Horizontal: 3054, 3564)
300G	498984S	1	MUFFLER -(Super Lo Tone)
300H	692099	1	MUFFLER -(Lo Mount)
300I	807953	1	MUFFLER
355	842122	2	WASHER -(Muffler Bracket)
436	805609	1	MANIFOLD, Exhaust -(Cylinder 2) (Side Outlet)
436A	692061	1	MANIFOLD, Exhaust -(Cylinder 2) (Side Outlet)
436B	808916	1	MANIFOLD, Exhaust -(Cylinder 2) (Side Outlet)
436C	805778	1	MANIFOLD, Exhaust -(Wide Area Walker)
437	691902	4	SCREW -(Exhaust Manifold)
710	807689	1	COVER, Oil Filter
725	806102	1	SHIELD, Heat
728	690297	2	SCREW
740	793859	1	NUT
819	691514	2	SCREW -(Muffler Bracket) (M6 X 1.0)
819A	807084	2	SCREW -(Muffler Bracket)
819B	692056	2	SCREW -(Muffler Bracket) (M8x1.25)
819C	692062	2	SCREW -(Muffler Bracket)
837	808085	2	SPACER, Muffler -(Includes 2)
863	806759	1	BRACKET, Muffler
863A	691513	1	BRACKET, Muffler
882	692074	2	FLANGE, Exhaust -(3054 & 3564)
882A	806965	2	FLANGE, Exhaust
883	691613	2	GASKET, Exhaust
884	690898	1	CLAMP, Muffler
884A	691956	1	CLAMP, Muffler
988	690687	1	GASKET, Oil Adapter

Not For Reproduction

Copyright © Briggs & Stratton. All Rights reserved

436

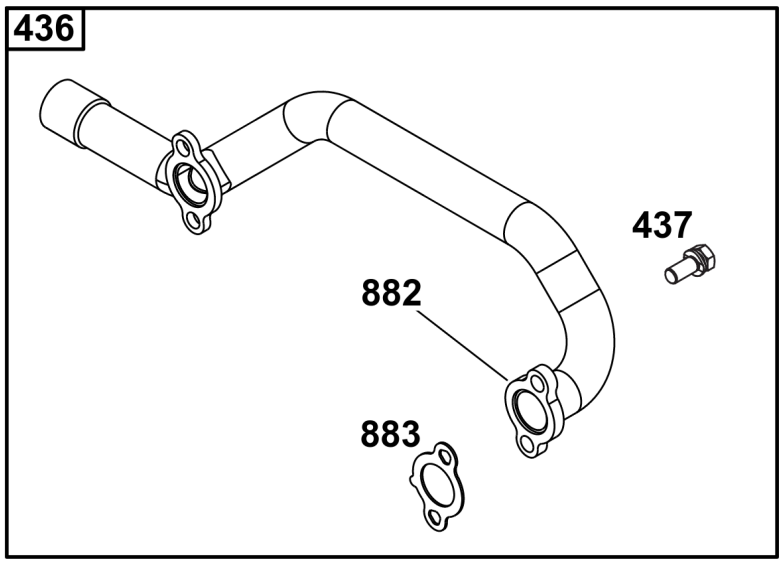

436A

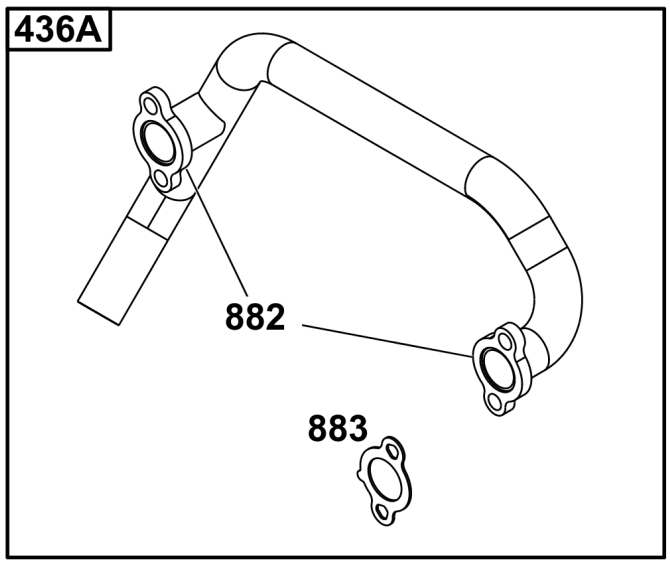

436B

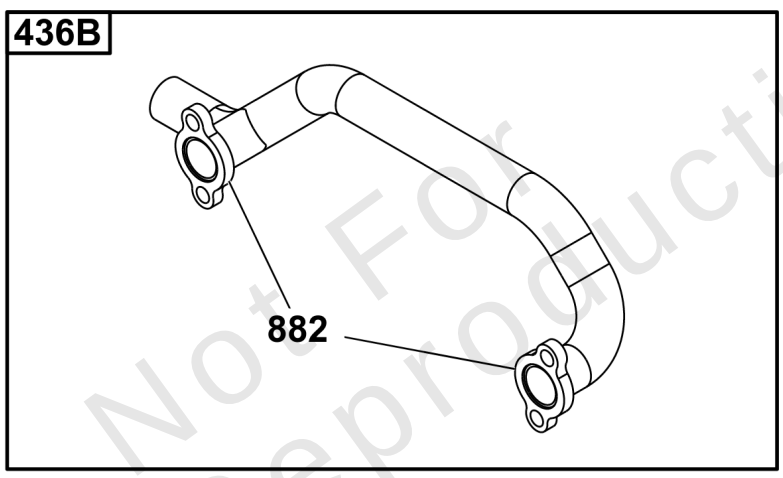

436C

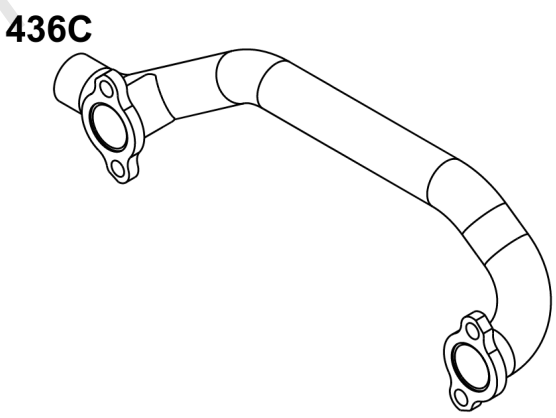

436D

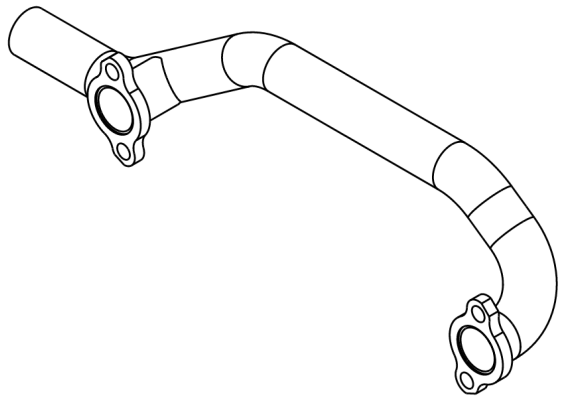

Not For Reproduction

Copyright © Briggs & Stratton. All Rights reserved

Oil Filter Side Outlet Manifolds

REF NO	PART NO	QTY	DESCRIPTION
436	805609	1	MANIFOLD, Exhaust -(Vertical: 3567)
436A	692061	1	MANIFOLD, Exhaust -(Horizontal: 3054, 3564)
436B	691501	1	MANIFOLD, Exhaust -(Horizontal: 3054, 3564)
436C	808908	1	MANIFOLD, Exhaust -(Horizontal: 3854, 3864)
436D	808916	1	MANIFOLD, Exhaust -(Horizontal: 3854, 3864) (Vertical: 3867)
437	691902	4	SCREW -(Exhaust Manifold)
882	692074	2	FLANGE, Exhaust
883	691613	2	GASKET, Exhaust

Not For Reproduction

Copyright © Briggs & Stratton. All Rights reserved

436

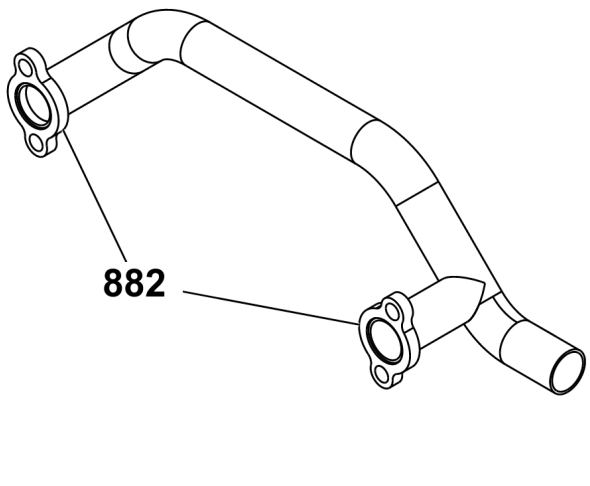

436A

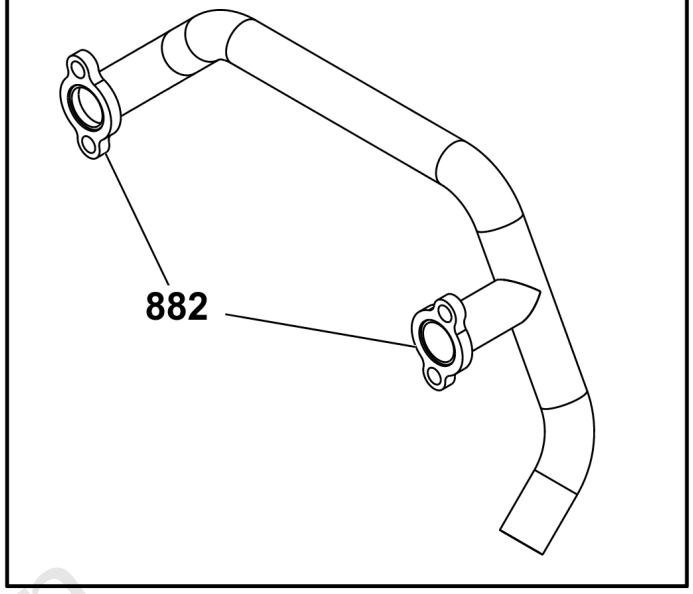

436B

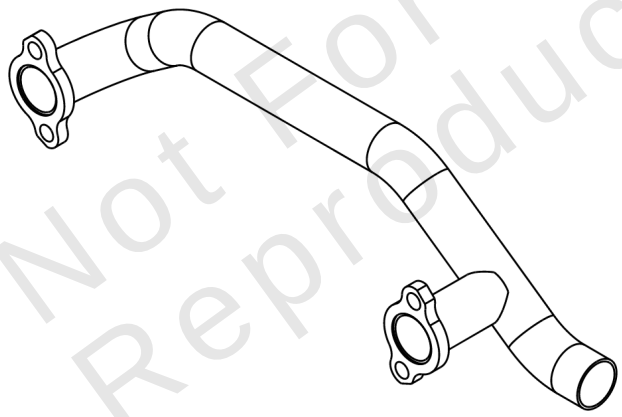

Not For Reproduction

Copyright © Briggs & Stratton. All Rights reserved

Starter Motor Side Outlet Manifolds

REF NO	PART NO	QTY	DESCRIPTION
436	691502	1	MANIFOLD, Exhaust -(Horizontal: 3054, 3564)
436A	691499	1	MANIFOLD, Exhaust -(Horizontal: 3054, 3564)
436B	808909	1	MANIFOLD, Exhaust -(Horizontal: 3854, 3864) (Vertical: 3867)
882	692074	2	FLANGE, Exhaust

Not For Reproduction

Copyright © Briggs & Stratton. All Rights reserved

300

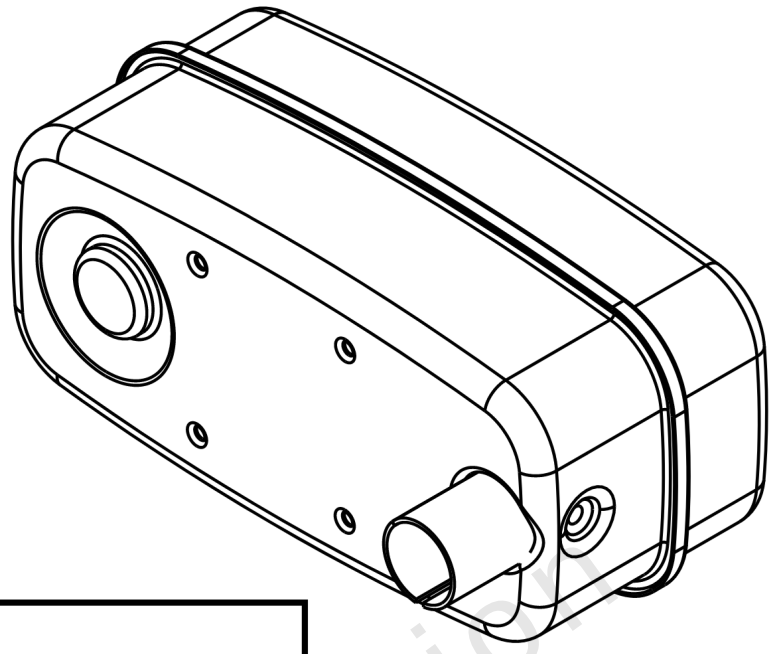

884

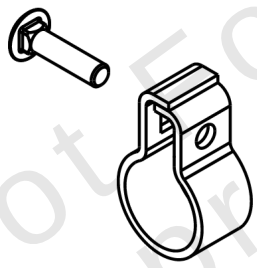

740

819

Not For Reproduction

Copyright © Briggs & Stratton. All Rights reserved

Mufflers

REF NO	PART NO	QTY	DESCRIPTION
300	995018	1	MUFFLER -(Inlet I.D. 1.14" (28.9mm))
740	793859	1	NUT
819	807084	4	SCREW
884	691956	1	CLAMP, Muffler

Not For Reproduction

Copyright © Briggs & Stratton. All Rights reserved

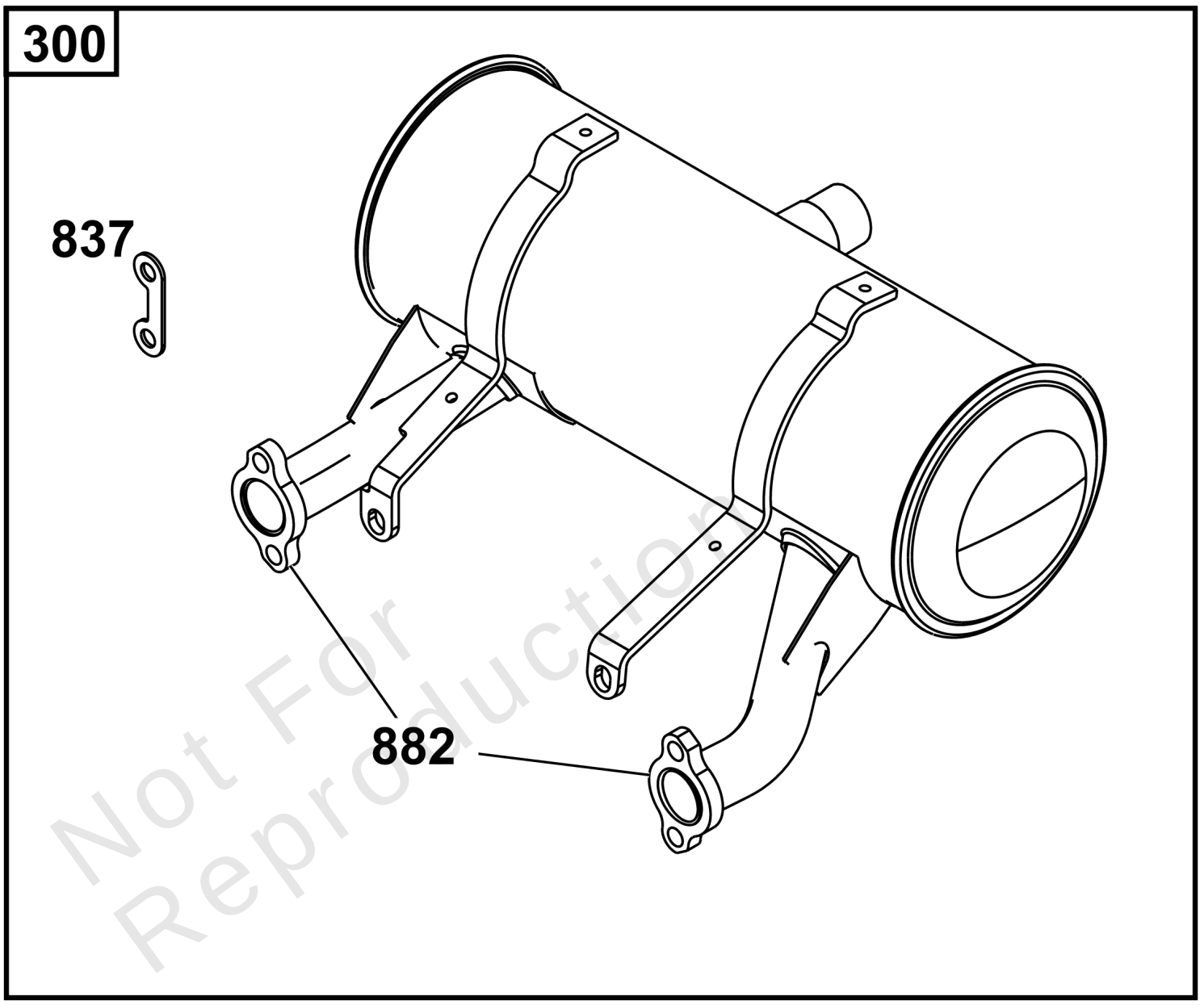

Not For Reproduction

Copyright © Briggs & Stratton. All Rights reserved

Center Outlet Mufflers

REF NO	PART NO	QTY	DESCRIPTION
300	808911	1	MUFFLER -(5" Round) (Horizontal: 3854, 3864)
837	808085	2	SPACER, Muffler
882	806965	2	FLANGE, Exhaust

Not For Reproduction

Copyright © Briggs & Stratton. All Rights reserved

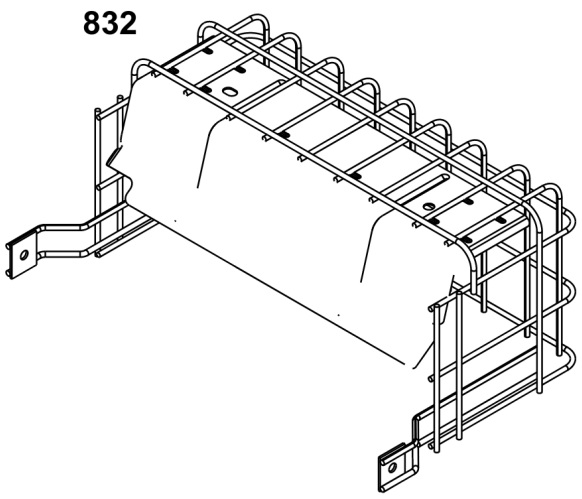

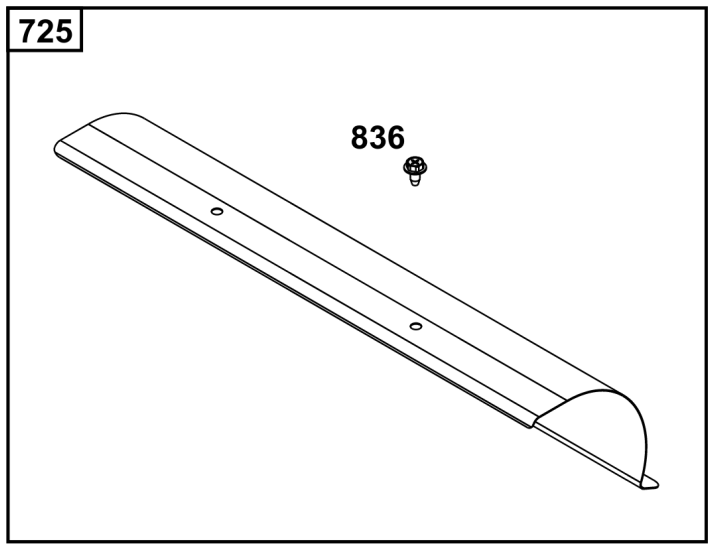

Not For Reproduction

Copyright © Briggs & Stratton. All Rights reserved

Muffler Guards and Shields

REF NO	PART NO	QTY	DESCRIPTION
725	846568	1	SHIELD, Heat -(For 5" Round Mufflers) (Horizontal: 3854, 3864)
832	691571	1	GUARD, Muffler -(Assembly for 690906 & 691562) (Horizontal: 3054, 3564)
836	692067	4	SCREW

Not For Reproduction

Copyright © Briggs & Stratton. All Rights reserved

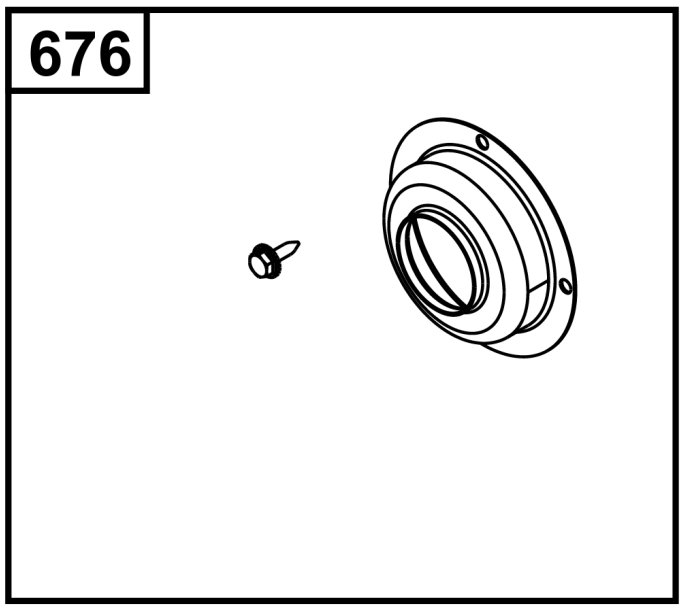

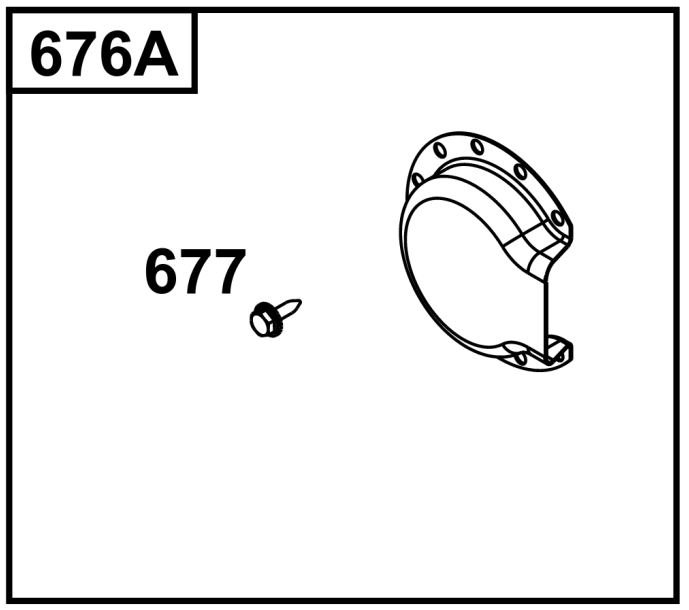

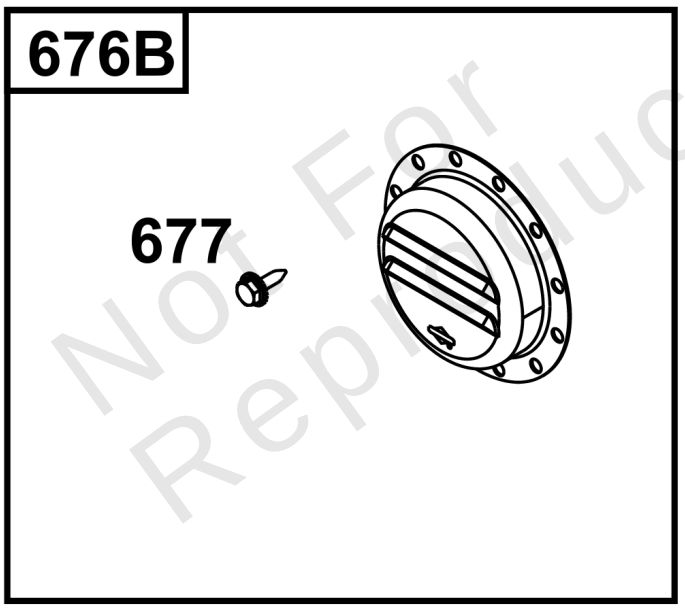

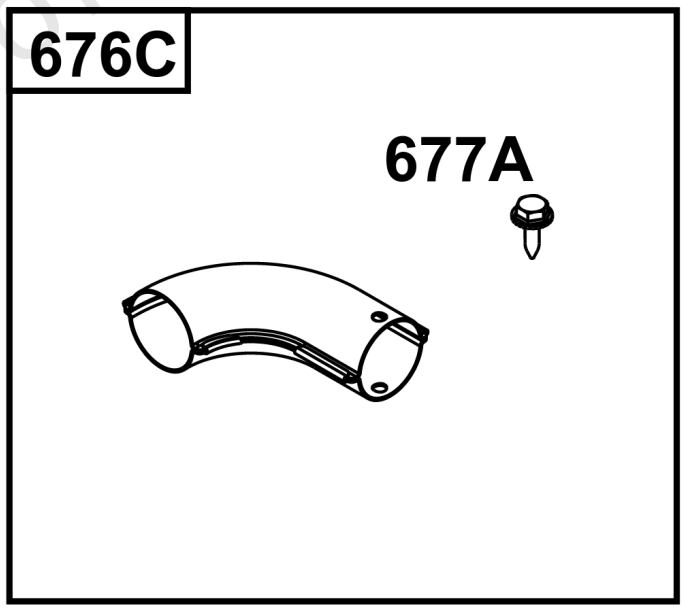

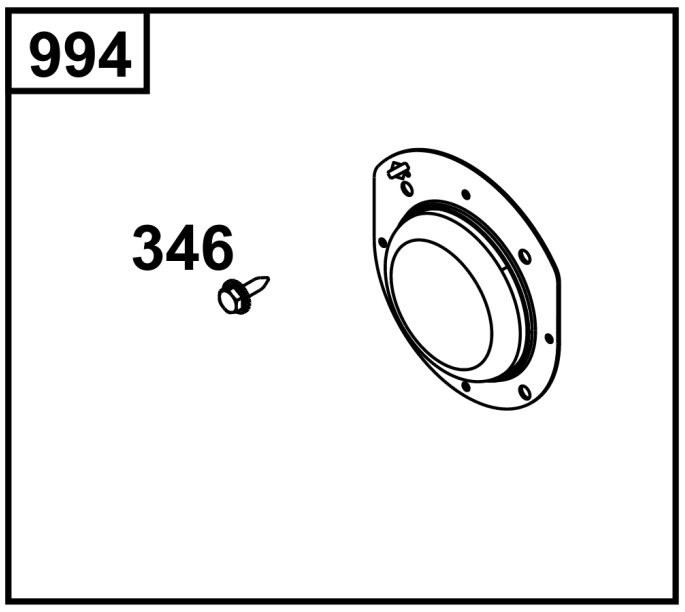

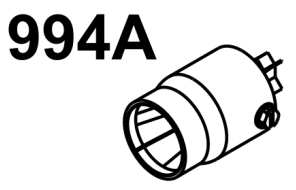

Not For Reproduction

Copyright © Briggs & Stratton. All Rights reserved

Spark Arrestors and Deflectors

REF NO	PART NO	QTY	DESCRIPTION
346	794845	4	SCREW -(Spark Arrestor)
676	396903	1	DEFLECTOR, Muffler -(Direct Outlet) (Face Mounting with 4 Screws)
676A	795036	1	DEFLECTOR, Muffler -(Deflector 90 Degree) (Face Mounting with 4 Screws)
676B	795038	1	DEFLECTOR, Muffler -(Deflector Louvered) (Face Mounting with 4 Screws)
676C	495518	1	DEFLECTOR, Muffler -(Elbow for Muffler Assembly) (For Exit Pipe O.D. of 1.10" (28mm))
677	794845	4	SCREW -(Muffler Deflector)
677A	810079	1	SCREW -(Muffler Deflector)
994	794945	1	ARRESTOR, Spark -(Spark Arrestor) (Face Mounting with 4 Screws)
994A	594562	1	ARRESTOR-SPARK -(Spark Arrester) (For Exit Pipe O.D. of 1.10" (28mm))

Not For Reproduction

Copyright © Briggs & Stratton. All Rights reserved

613

1177

296

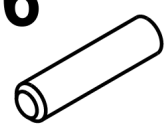

883

883A

882

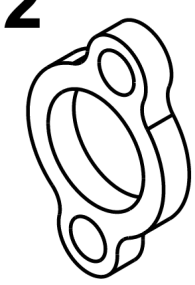

882A

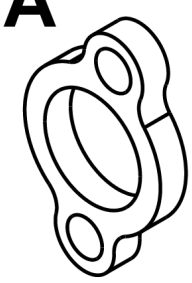

Not For Reproduction

Copyright © Briggs & Stratton. All Rights reserved

Muffler Mounting Hardware

REF NO	PART NO	QTY	DESCRIPTION
296	841185	4	STUD -(Mounting Mufflers)
613	691902	4	SCREW -(Mounting Mufflers)
882	692074	2	FLANGE, Exhaust -(3054 & 3564)
882A	806965	2	FLANGE, Exhaust -(3854 & 3864)
883	806425	2	GASKET, Exhaust -(Horizontal: 3854, 3864) (Vertical: 3567)
883A	691613	2	GASKET, Exhaust -(Horizontal: 3054, 3564) (Vertical: 3567)
1177	842067	4	NUT -(Required if Using 841185)

Not For Reproduction

Copyright © Briggs & Stratton. All Rights reserved

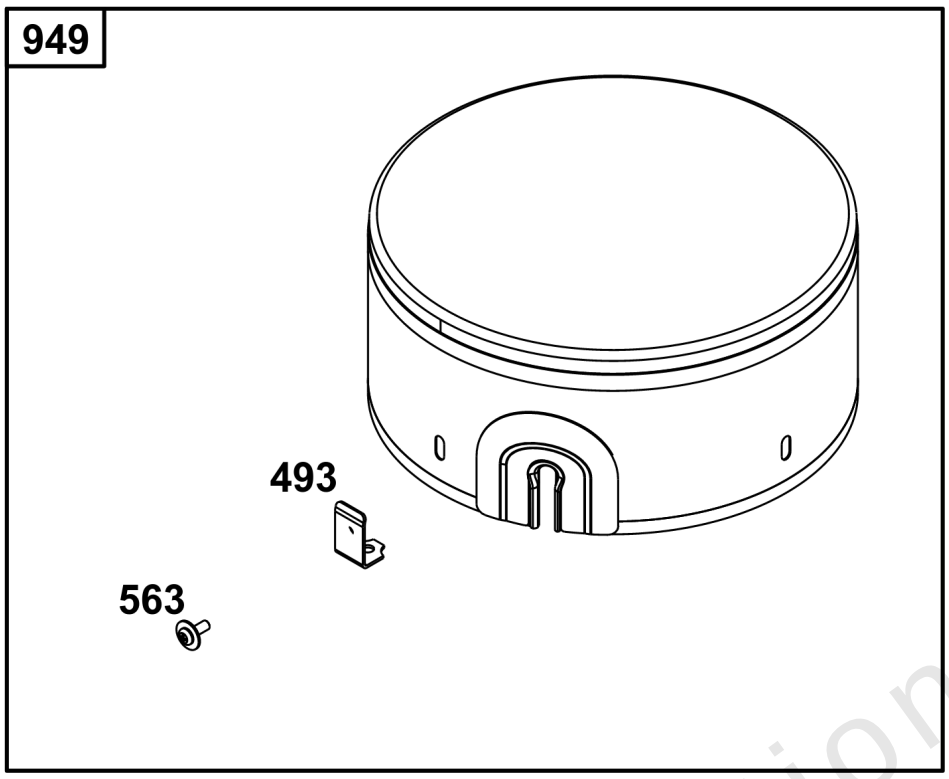

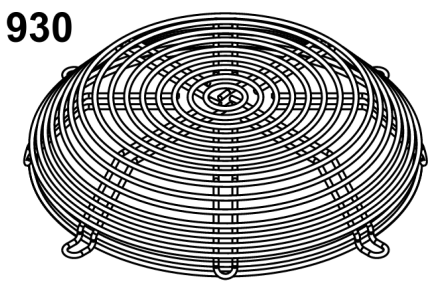

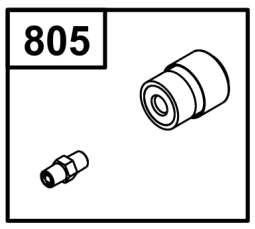

Not For Reproduction

Copyright © Briggs & Stratton. All Rights reserved

Flywheel and Air Intake Guards

REF NO	PART NO	QTY	DESCRIPTION
493	845729	4	BRACKET, Mounting
563	841441	4	SCREW
805	843024	1	MINDER, Filter -(For Engines with Cyclonic Air Filter)
930	846284	1	GUARD, Flywheel Fan
949	845728	1	GUARD, Debris Screen -(Vertical: 3867)

Not For Reproduction

Copyright © Briggs & Stratton. All Rights reserved

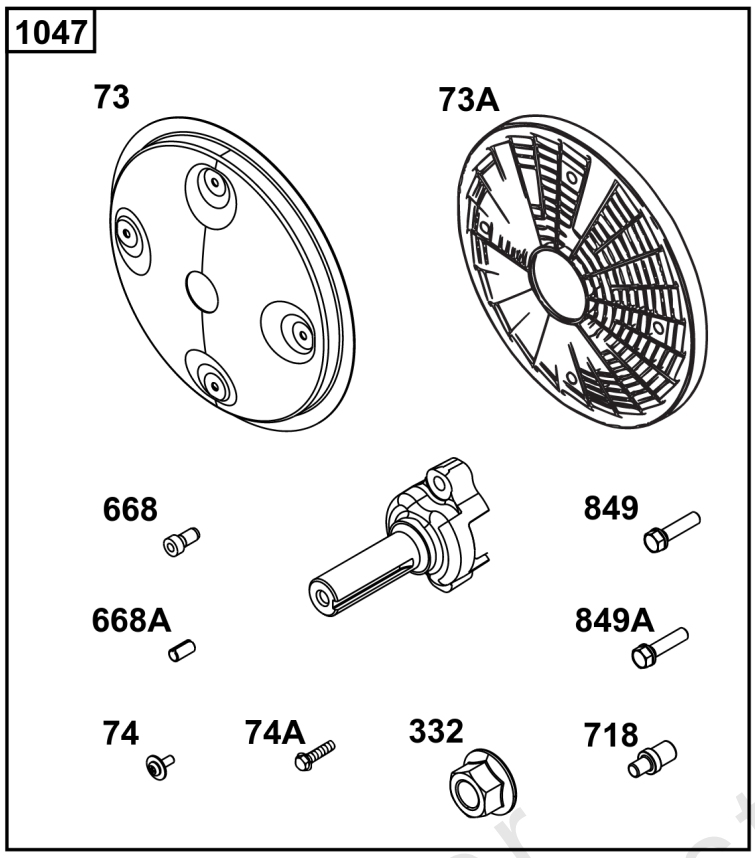

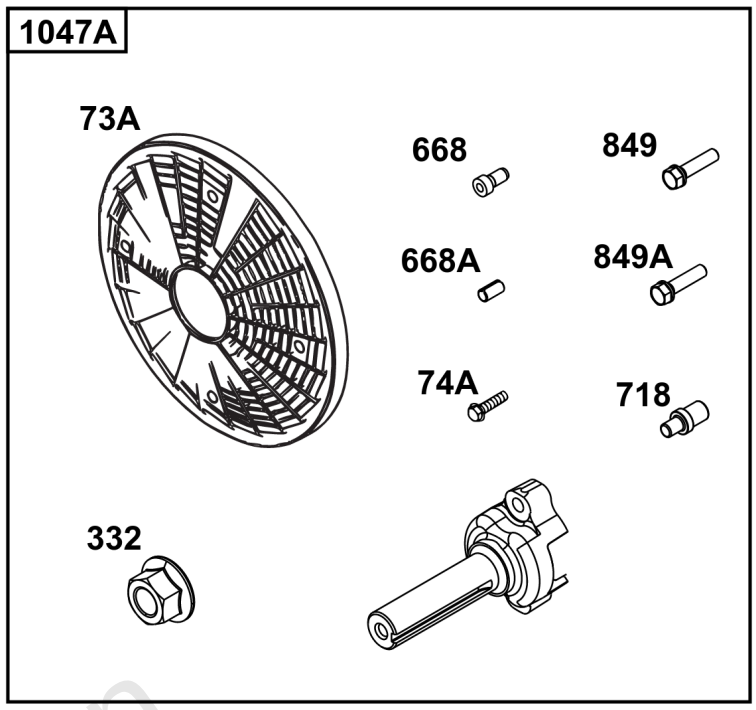

Not For Reproduction

Copyright © Briggs & Stratton. All Rights reserved

PTO

REF NO	PART NO	QTY	DESCRIPTION
73	841582	1	SCREEN, Rotating
73A	494439	1	SCREEN, Rotating
74	841441	4	SCREW -(Rotating Screen)
74A	691647	4	SCREW -(Rotating Screen)
332	690887	1	NUT -(Flywheel)
668	691500	4	SPACER -(Rotating Screen)
668A	691215	4	SPACER -(Rotating Screen)
718	841581	1	PIN, Locating -(32MM)
849	691088	2	SCREW -(Stub Shaft)
849A	846236	2	SCREW -(Stub Shaft)
1047	841580	1	SHAFT, Stub -(1" Diameter) (4.75" Length)
1047A	842655	1	SHAFT, Stub -(1" Diameter) (5.43" Length)

Not For Reproduction

Copyright © Briggs & Stratton. All Rights reserved

789

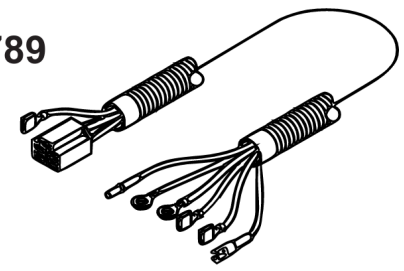

789A

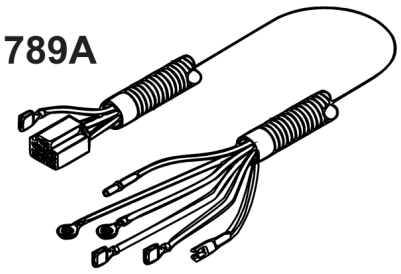

789B

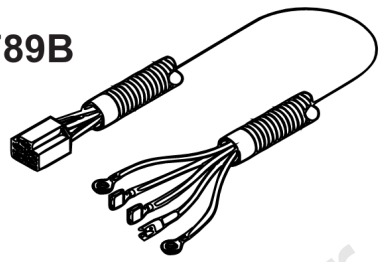

789C

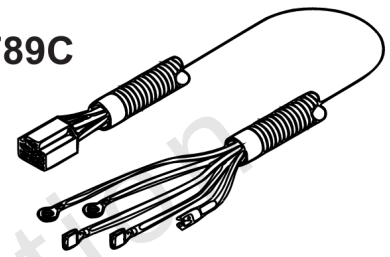

415

578

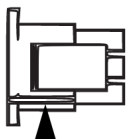

LOOSE CONNECTOR:
TE # 1-480704-0
MATE-N-LOK 6 POSITION HOUSING

Not For Reproduction

Copyright © Briggs & Stratton. All Rights reserved

Electrical

REF NO	PART NO	QTY	DESCRIPTION
415	1714480SM	1	PLUG -(Plug for Ignition Switch Removal)
578	84007350	1	WIRE ASSEMBLY -(Aids in Repowering Engine Application with 6-Pin Connector and Wires with Terminals to Create Custom Adapter Configurations)
789	691996	1	HARNESS, Wiring -(For 16 Amp Alternators)
789A	841318	1	HARNESS, Wiring -(For 16 Amp Alternators with Solenoid Shift Starter)
789B	847601	1	HARNESS, Wiring -(For 20 Amp Alternators)
789C	847602	1	HARNESS, Wiring -(For 20 Amp Alternators with Solenoid Shift Starter)

Not For Reproduction

Copyright © Briggs & Stratton. All Rights reserved

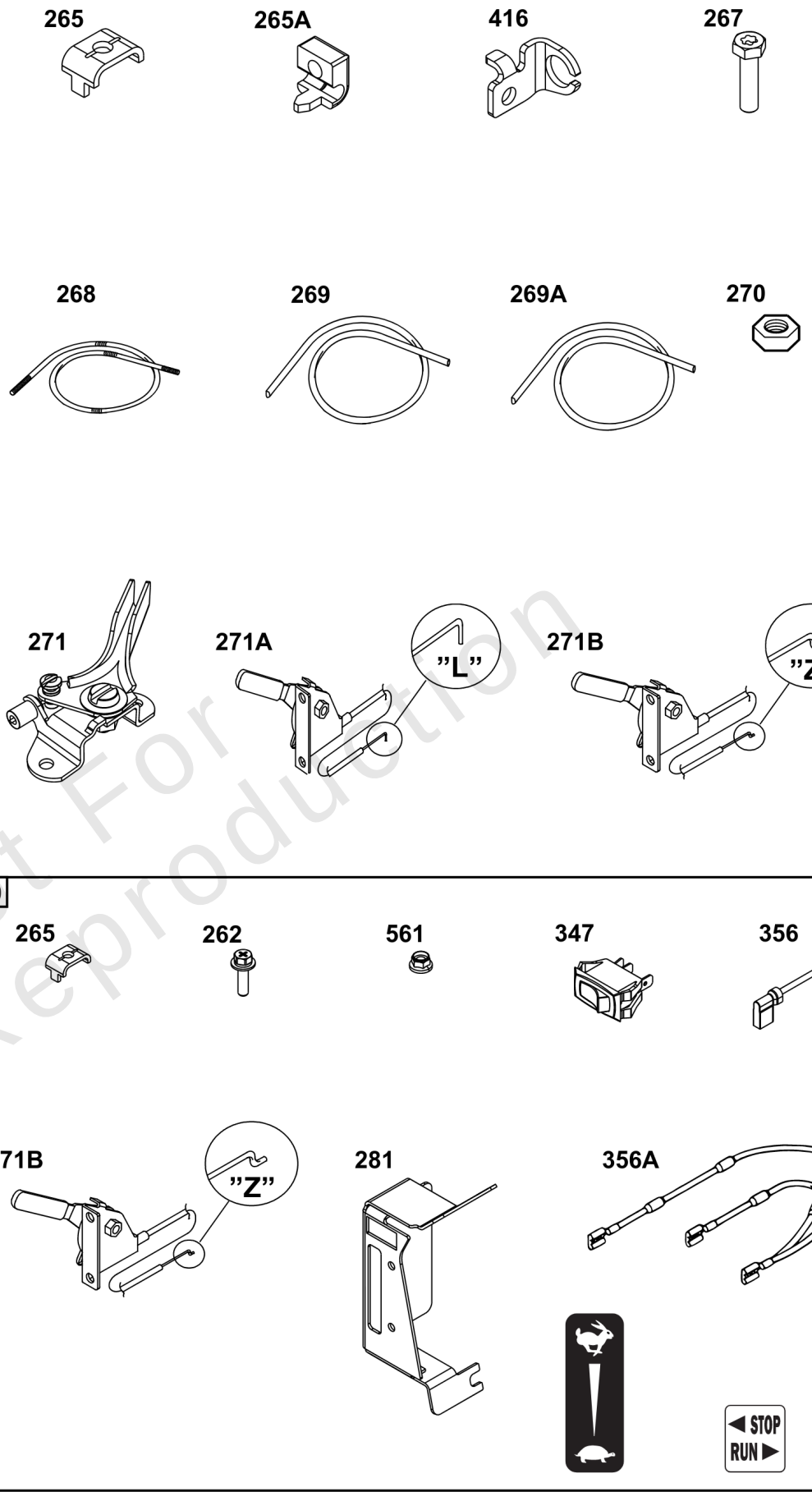

Not For Reproduction

Speed Control

REF NO	PART NO	QTY	DESCRIPTION
262	841552	1	SCREW
265	691024	1	CLAMP, Casing -(Casing Clamp for Hard Casing)
265A	690798	1	CLAMP, Casing -(Casing Clamp for Soft Casing)
267	792629	1	SCREW -(Screw for Casing Clamp)
268	691025	1	CASING, Control Wire -(Wire Casing 72")
269	26634	1	WIRE, Control -(Control Wire 78")
269A	93907	1	WIRE, Control -(Control Wire 100")
270	691027	1	NUT -(Nut for Wire Casing)
271	691028	1	LEVER, Control -(Speed Control Lever Assembly)
271A	692105	1	LEVER, Control -(Speed Control Lever Assembly) ('L' Shaped End)
271B	692541	1	LEVER, Control -(Speed Control Lever Assembly) ('Z' Shaped End)
281	690742	1	PANEL, Control
347	691995	1	SWITCH-ROCKER
356	690796	1	WIRE, Stop
356A	691999	1	WIRE ASSEMBLY
416	595196	1	BRACKET, Throttle Cable -(Casing Clamp for Snap-In Casing)
416A	84006945	1	BRACKET, Throttle Cable
561	806447	1	NUT
620	494052	1	BRACKET, Control -(Throttle Control for Vanguard V-Twin Horizontal Small Block)
1619	691693	1	SCREW

Not For Reproduction

Copyright © Briggs & Stratton. All Rights reserved

VANGUARD®

COMMERCIAL POWER

BRIGGS&STRATTON®

Copyright © Briggs & Stratton. All Rights reserved

25-Apr-2024